Agilent 34941A-34942A RF Multiplexer Modules

User's Guide

Agilent Technologies, Inc.
Printed in Malaysia
Edition 2
September 2012 E0912

34980-90041

Agilent Technologies

Notices

© Agilent Technologies, Inc. 2008

No part of this manual may be reproduced in any form or by any means (including electronic storage and retrieval or translation into a foreign language) without prior agreement and written consent from Agilent Technologies, Inc. as governed by United States and international copyright laws.

Manual Part Number

34980-90041

Edition

Second Edition, September 2012

Printed in Malaysia

Agilent Technologies, Inc.
3501 Stevens Creek Blvd
Santa Clara, CA 95052 USA

Microsoft® and Windows® are U.S. registered trademarks of Microsoft Corporation.

Software Revision

This guide is valid for the firmware that was installed in the instrument at the time of manufacture. However, upgrading the firmware may add or change product features. For the latest firmware and documentation, go to the product page at:

www.agilent.com/find/34980A

Warranty

The material contained in this document is provided "as is," and is subject to being changed, without notice, in future editions. Further, to the maximum extent permitted by applicable law, Agilent disclaims all warranties, either express or implied, with regard to this manual and any information contained herein, including but not limited to the implied warranties of merchantability and fitness for a particular purpose. Agilent shall not be liable for errors or for incidental or consequential damages in connection with the furnishing, use, or performance of this document or of any information contained herein. Should Agilent and the user have a separate written agreement with warranty terms covering the material in this document that conflict with these terms, the warranty terms in the separate agreement shall control.

Technology Licenses

The hardware and/or software described in this document are furnished under a license and may be used or copied only in accordance with the terms of such license.

Restricted Rights Legend

U.S. Government Restricted Rights. Software and technical data rights granted to the federal government include only those rights customarily provided to end user customers. Agilent provides this customary commercial license in Software and technical data pursuant to FAR 12.211 (Technical Data) and 12.212 (Computer Software) and, for the Department of Defense, DFARS 252.227-7015 (Technical Data - Commercial Items) and DFARS 227.7202-3 (Rights in Commercial Computer Software or Computer Software Documentation).

Safety Notices

CAUTION

A **CAUTION** notice denotes a hazard. It calls attention to an operating procedure, practice, or the like that, if not correctly performed or adhered to, could result in damage to the product or loss of important data. Do not proceed beyond a **CAUTION** notice until the indicated conditions are fully understood and met.

WARNING

A WARNING notice denotes a hazard. It calls attention to an operating procedure, practice, or the like that, if not correctly performed or adhered to, could result in personal injury or death. Do not proceed beyond a WARNING notice until the indicated conditions are fully understood and met.

Additional Safety Notices

The following general safety precautions must be observed during all phases of operation of this instrument. Failure to comply with these precautions or with specific warnings or instructions elsewhere in this manual violates safety standards of design, manufacture, and intended use of the instrument. Agilent Technologies assumes no liability of the customer's failure to comply with the requirements.

General

Do not use this products in any manner not specified by the manufacturer. The protective features of this product may be impaired if it is used in a manner not specified in the operation instructions.

Before Applying Power

Verify that all safety precautions are taken. Make all connections to the unit before applying power.

Ground the Instrument

This product is provided with protective earth terminals. To minimize shock hazard, the instrument must be connected to the ac power mains through a grounded power cable, with the ground wire firmly connected to an electrical ground (safety ground) at the power outlet. Any interruption of the protective (grounding) conductor or disconnection of the protective earth terminal will cause a potential shock hazard that could result in personal injury.

Do Not Operate in an Explosive Atmosphere

Do not operate the instrument in the presence of flammable gases or fumes.

Do Not Remove the Instrument Cover

Only qualified, service-trained personal who are aware of the hazards involved should remove instrument covers. Always disconnect the power cable and any external circuits before removing the instrument cover.

Do Not Modify the Instrument

Do not install substitute parts or perform any unauthorized modification to the product. Return the product to an Agilent Sales and Service Office for service and repair to ensure that safety features are maintained.

In Case of Damage

Instruments that appear damaged or defective should be made inoperative and secured against unintended operation until they can be repaired by qualified service personnel.

Safety Symbols

Alternating current

Frame or chassis terminal

Standby supply. Unit is not completely disconnected from ac mains when switch is off

Caution, risk of electric shock

Caution, refer to accompanying description

Waste Electrical and Electronic Equipment (WEEE) Directive 2002/96/EC

This product complies with the WEEE Directive (2002/96/EC) marking requirement. The affixed product label (see above) indicates that you **must not discard this electrical/electronic product in domestic household waste**.

Product Category: With reference to the equipment types in the WEEE directive Annex 1, this product is classified as a "Monitoring and Control instrumentation" product.

To return unwanted products, contact your local Agilent office, or go to www.agilent.com/environment/product for more information.

Technical Support

If you have questions about your shipment, or if you need information about warranty, service, or technical support, contact Agilent Technologies:

In the United States: (800) 829-4444
In Europe: 31 20 547 2111
In Japan: 0120-421-345

Or go to www.agilent.com/find/assist for information on contacting Agilent in your country of specific location. You can also contact your Agilent Technologies Representative.

Declaration of Conformity

Declarations of Conformity for this product and for other Agilent products may be downloaded from the Internet. There are two methods to obtain the Declaration of Conformity:

- Go to http://regulations.corporate.agilent.com/DoC/search.htm . You can then search by product number to find the latest Declaration of Conformity.
- Alternately, you can go to the product web page (www.agilent.com/find/34980A), click on the Document Library tab then scroll down until you find the Declaration of Conformity link.

Contents

RF Multiplexer Switch Modules 1
Operating Considerations. 2
34941A and 34942A SCPI Programming Examples 3
34941A and 34942A Simplified Schematic 4

RF Multiplexer Switch Modules

This User's Guide covers the following two plug-in modules for the Agilent 34980A Multifunction Switch/Measure Unit:

34941A	Quad 1x4 50Ω 3GHz RF multiplexer
34942A	Quad 1x4 75Ω 1.5GHz RF multiplexer

These modules provide high density radio frequency (RF) signal switching, with four independent 1x4 multiplexer banks in each module.

Both modules contain four banks of latching switches. Each bank consists of three Form C relays (see the simplified schematic on page 4). To create a larger switching configuration, you can connect the banks in this module *and* connect to banks in *other* RF MUX modules. For example, you can create up to 1x97 RF MUX in a single 34980A mainframe.

The important differences between the two RF MUX modules lie in their characteristic impedance and their use of connectors (external cables are *not* provided with the module):

- The 34941A – the 50-Ω version – uses SMA connectors.

  When installing SMA cables on the 34941A module, it is recommend that you tighten them to 0.8 - 1.1 Nm (7-10 in-lbs) of torque.

  CAUTION SMA connectors are easily damaged, especially when tightening a neighboring connector with a wrench. To help prevent damage and contamination, do not remove a connector's protective cap until immediately prior to installing a cable on that connector.

- The 34942A – the 75-Ω variation – uses Mini SMB connectors.

  NOTE For the 34942A, it is recommended that you use gold-plated straight plug connectors (75Ω Miniature SMB). Because of the space constraints between connectors on this module, right-angle plugs and SMB adapters are not recommended.

Operating Considerations.

Electrical Considerations

See the *Introduction to the Plug In Modules* chapter of the 34980A Mainframe User's Guide for detailed environmental operating conditions for the 34980A mainframe and its installed modules. That guidance sets maximum per channel current and power ratings at rated voltage for pollution degree 1 (dry) and pollution degree 2 (possible condensation) conditions, for each of the GP modules.

Signal Connections

The RF MUX modules do not connect to the analog buses. Instead, all signal connections are made through the visible connectors via external cables. Each visible connector on an RF MUX module is labeled with a number (11 through 44), that represents a channel you can close programmatically from the front panel or with using the Web Browser Interface. When you close a channel on the RF MUX modules you automatically close all relays that create a direct path to the Common of a bank.

Channel Relay Operation

With RF MUX switches, you cannot open switches programmatically. You can only close a channel. When you close one channel, another channel automatically opens. Therefore, only one channel relay in each bank is closed at any time.

Electrical Isolation

You can configure each bank on the RF MUX modules to be either isolated or chassis-grounded. The modules come with chassis-grounded metal shoulder washers installed on all connectors in each bank of relays. If you want to isolate a bank from the other banks and from chassis-ground, you must remove the five metal washers in that bank and replace them with the provided plastic shoulder washers.

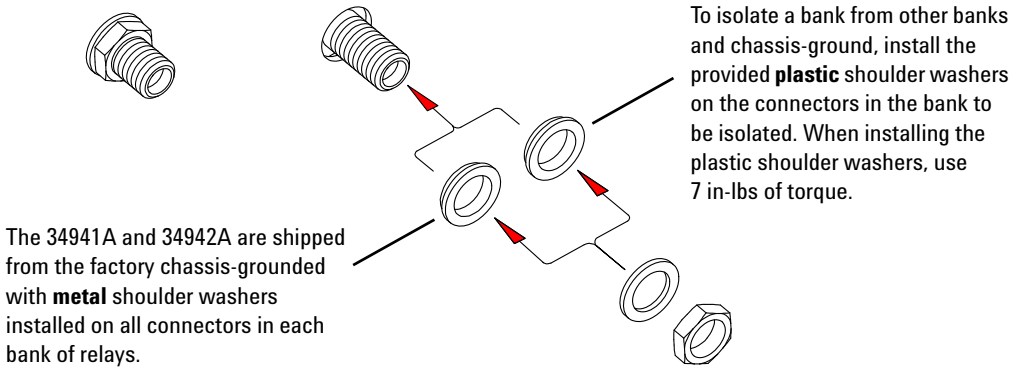

34941A and 34942A SCPI Programming Examples

The programming examples below provide you with SCPI command examples to use for actions specific to the RF MUX switch modules.

The slot and channel addressing scheme used in these examples follow the form **sccc** where **s** is the mainframe slot number (1 through 8) and **ccc** is the channel number. For information on specific configurations, refer to the simplified schematic on page 4.

For complete information on the SCPI commands used to program the 34980A, refer to the *Agilent 34980A Programmer's Reference* contained on the *34980A Product Reference* CD. For example programs, also refer to the *34980A Product Reference* CD.

Example: Closing channels You can only *close* channels on the RF MUX modules. When you close a channel, any already-closed channels open automatically. The relays switch in sequence to avoid momentary connection of the wrong input to the multiplexer output. The following command closes channel 03 on Bank 1 of an RF MUX module in slot 5.

```
ROUTe:CLOSe (@5103)
```

Example: Querying channels for open or close state The following commands returns the close or open state of channel 33 of a module in slot 5.

```
ROUT:CLOSe? (@5033)
ROUT:OPEN? (@5033)
```

Example: Querying the system for module identify The following command returns the identify of the module installed in slot 7.

```
SYSTem:CTYPe? 7
```

Example: Reading the cycle count for a relay On these modules, each bank consists of two *leaf* relays and one *tree* relay (see the simplified schematic on page 4). The module stores the cycle count for each of the three relays on all four banks. The cycle count is the greater of the three values on the specified bank (i.e., reflecting the cycle count for the entire bank). Therefore, the count for Channels 101, 102, 103, and 104 will *always* be equal. The following statement reads back the number of completed cycles for the channels 101 and 202 on a module installed in slot 6.

```
DIAGnostic:RELay:CYCLes? (@6101,6202)
```

Example: Clearing the cycle count for a relay The following command resets the cycle count on the channels 103 and 201 for a module in slot 1. Note that clearing the cycle count on a specific channel will clear the count on *all* three relays in the corresponding bank.

```
DIAGnostic:RELay:CYCLes:CLEar (@1103,1201)
```

Example: Resetting module to power-on state The following command resets a module in slot 4 to its power-on state.

```
SYSTem:CPON 4
```

34941A and 34942A Simplified Schematic

Both the 34941A and 34942A modules are configured alike. Each contains four banks of latching switches. Each bank consists of three Form C relays.

The front panel of the two RF MUX modules are similar with channel labels in the same positions, the unique product number on the left, and the product description on the right.

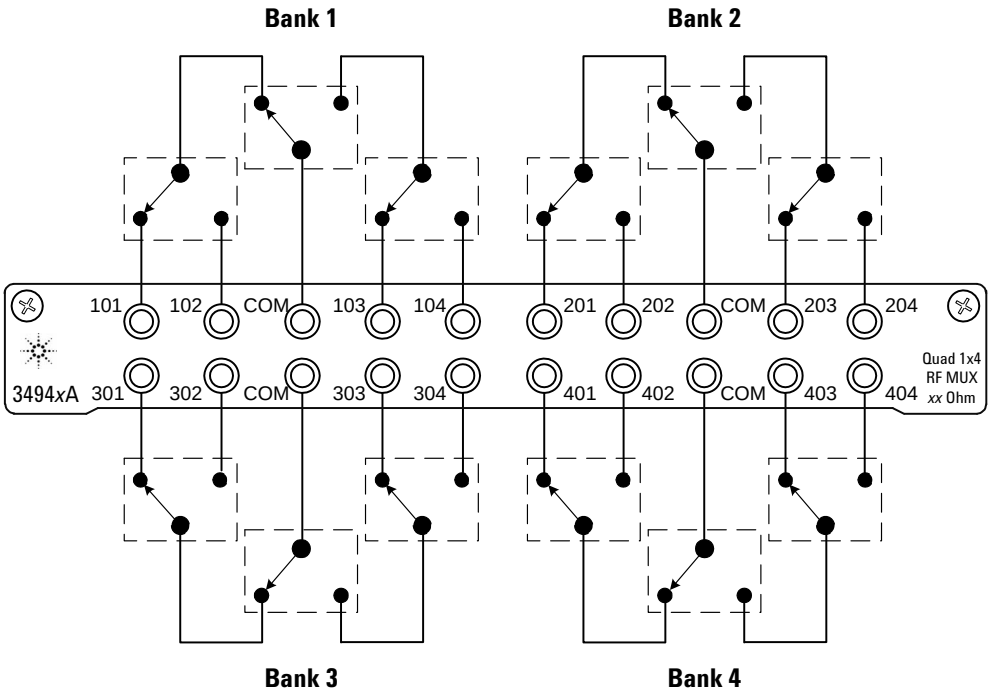

Index

C

channel relays, 2
connectors, 1

D

description, 1

E

electrical isolation, 2

G

grounding, 2

M

mini SMB connectors, 1
module descriptions, 1
module impedance
  34941A, 1
  34942A, 1

P

programming examples, 3

R

relay operation, 2

S

simplified schematics, 4
SMA connectors, 1

W

warranty, ii