Agilent 34951A 4-Channel Isolated D/A Converter with Waveform Memory Module

User's Guide

Agilent Technologies, Inc.
Printed in Malaysia
Edition 2
September 2012 E0912

34980-90051

Agilent Technologies

Notices

© Agilent Technologies, Inc. 2008

No part of this manual may be reproduced in any form or by any means (including electronic storage and retrieval or translation into a foreign language) without prior agreement and written consent from Agilent Technologies, Inc. as governed by United States and international copyright laws.

Manual Part Number

34980-90051

Edition

Second Edition, September 2012

Printed in Malaysia

Agilent Technologies, Inc.
3501 Stevens Creek Blvd
Santa Clara, CA 95052 USA

Microsoft® and Windows® are U.S. registered trademarks of Microsoft Corporation.

Software Revision

This guide is valid for the firmware that was installed in the instrument at the time of manufacture. However, upgrading the firmware may add or change product features. For the latest firmware and documentation, go to the product page at:

www.agilent.com/find/34980A

Warranty

The material contained in this document is provided "as is," and is subject to being changed, without notice, in future editions. Further, to the maximum extent permitted by applicable law, Agilent disclaims all warranties, either express or implied, with regard to this manual and any information contained herein, including but not limited to the implied warranties of merchantability and fitness for a particular purpose. Agilent shall not be liable for errors or for incidental or consequential damages in connection with the furnishing, use, or performance of this document or of any information contained herein. Should Agilent and the user have a separate written agreement with warranty terms covering the material in this document that conflict with these terms, the warranty terms in the separate agreement shall control.

Technology Licenses

The hardware and/or software described in this document are furnished under a license and may be used or copied only in accordance with the terms of such license.

Restricted Rights Legend

U.S. Government Restricted Rights. Software and technical data rights granted to the federal government include only those rights customarily provided to end user customers. Agilent provides this customary commercial license in Software and technical data pursuant to FAR 12.211 (Technical Data) and 12.212 (Computer Software) and, for the Department of Defense, DFARS 252.227-7015 (Technical Data - Commercial Items) and DFARS 227.7202-3 (Rights in Commercial Computer Software or Computer Software Documentation).

Safety Notices

CAUTION

A **CAUTION** notice denotes a hazard. It calls attention to an operating procedure, practice, or the like that, if not correctly performed or adhered to, could result in damage to the product or loss of important data. Do not proceed beyond a **CAUTION** notice until the indicated conditions are fully understood and met.

WARNING

A WARNING notice denotes a hazard. It calls attention to an operating procedure, practice, or the like that, if not correctly performed or adhered to, could result in personal injury or death. Do not proceed beyond a WARNING notice until the indicated conditions are fully understood and met.

Additional Safety Notices

The following general safety precautions must be observed during all phases of operation of this instrument. Failure to comply with these precautions or with specific warnings or instructions elsewhere in this manual violates safety standards of design, manufacture, and intended use of the instrument. Agilent Technologies assumes no liability of the customer's failure to comply with the requirements.

General

Do not use this products in any manner not specified by the manufacturer. The protective features of this product may be impaired if it is used in a manner not specified in the operation instructions.

Before Applying Power

Verify that all safety precautions are taken. Make all connections to the unit before applying power.

Ground the Instrument

This product is provided with protective earth terminals. To minimize shock hazard, the instrument must be connected to the ac power mains through a grounded power cable, with the ground wire firmly connected to an electrical ground (safety ground) at the power outlet. Any interruption of the protective (grounding) conductor or disconnection of the protective earth terminal will cause a potential shock hazard that could result in personal injury.

Do Not Operate in an Explosive Atmosphere

Do not operate the instrument in the presence of flammable gases or fumes.

Do Not Remove the Instrument Cover

Only qualified, service-trained personal who are aware of the hazards involved should remove instrument covers. Always disconnect the power cable and any external circuits before removing the instrument cover.

Do Not Modify the Instrument

Do not install substitute parts or perform any unauthorized modification to the product. Return the product to an Agilent Sales and Service Office for service and repair to ensure that safety features are maintained.

In Case of Damage

Instruments that appear damaged or defective should be made inoperative and secured against unintended operation until they can be repaired by qualified service personnel.

Safety Symbols

Alternating current

Frame or chassis terminal

Standby supply. Unit is not completely disconnected from ac mains when switch is off

Caution, risk of electric shock

Caution, refer to accompanying description

Waste Electrical and Electronic Equipment (WEEE) Directive 2002/96/EC

This product complies with the WEEE Directive (2002/96/EC) marking requirement. The affixed product label (see above) indicates that you **must not discard this electrical/electronic product in domestic household waste**.

Product Category: With reference to the equipment types in the WEEE directive Annex 1, this product is classified as a "Monitoring and Control instrumentation" product.

To return unwanted products, contact your local Agilent office, or go to www.agilent.com/environment/product for more information.

Technical Support

If you have questions about your shipment, or if you need information about warranty, service, or technical support, contact Agilent Technologies:

In the United States: (800) 829-4444
In Europe: 31 20 547 2111
In Japan: 0120-421-345

Or go to www.agilent.com/find/assist for information on contacting Agilent in your country of specific location. You can also contact your Agilent Technologies Representative.

Declaration of Conformity

Declarations of Conformity for this product and for other Agilent products may be downloaded from the Internet. There are two methods to obtain the Declaration of Conformity:

- Go to http://regulations.corporate.agilent.com/DoC/search.htm . You can then search by product number to find the latest Declaration of Conformity.
- Alternately, you can go to the product web page (www.agilent.com/find/34980A), click on the Document Library tab then scroll down until you find the Declaration of Conformity link.

Contents

34951A 4-Channel Isolated D/A Converter with Waveform Memory Module 1
Operating Considerations 1
Level Output Mode 1
Waveform (Trace) Mode 2
Clock In 2
Clock Out 2
Trigger In 3
Trigger Out 3
Auto-Calibration 3
34951A SCPI Programming Examples 4
Level Mode 4
Waveform Mode 4
External Clock 5
External Trigger 6
Auto Calibration 6
Configuring a DAC Module 7
34951A Simplified Block Diagrams 8
34951A D-Sub Connector Pinout 9
34951T Terminal Block 10

34951A 4-Channel Isolated D/A Converter with Waveform Memory Module

The 34951A 4-Ch Isolated D/A module (DAC module) has four independent, isolated DAC channels that output DC voltage up to ±16V or DC current up to ±20 mA (Level Output Mode). Since the DACs are electrically isolated, you can stack or combine multiple DACs to have up to ±64 V on a module. It also features a capability to specify and store waveform points (Waveform Trace Mode).

You can control each channel manually, or use the onboard memory to store multiple sequenced points.

Operating Considerations

See the *Introduction to the Plug In Modules* chapter of the 34980A Mainframe User's Guide for detailed environmental operating conditions for the 34980A mainframe and its installed modules. That guidance sets maximum per channel current ratings at rated voltage for pollution degree 1 (dry) and pollution degree 2 (possible condensation) conditions, for the DAC module.

Level Output Mode

The module can generate voltages between -16 V DC and +16 V DC at 500 μV resolution on any or all four channels. Each channel configured for voltage output has hardware remote-sensing capability to ensure that an accurate voltage is present at the load. With the remote sensing feature, the DAC channel outputs an additional voltage to compensate for the voltage drop in the test leads. Thus, using the sense connections, the load voltage equals the programmed voltage as long as the resistance in each sense lead is less than 2.5Ω and the maximum voltage drop in the output leads is 0.5 volts.

NOTE To ensure that an accurate voltage is present at the loads, it is recommended that you use remote-sensing. However, if remote-sensing is not used, do not connect loads or cables to the remote-sensing terminals (H Sense and L Sense).

When using the remote-sensing feature, connect sense wires from the load to the High Sense and Low Sense terminals for the desired channels.

Each channel can also generate current between -20 mA and +20 mA at 630 nA resolution. When outputting current the High Sense and Low Sense terminals are not used and are opened. For protection, each channel incorporates a fuse that will open at greater than 20 mA. If an overload condition exists, the fuse will open, but no error or SRQ will be generated. To reset the fuse, remove the overload and wait a few minutes for the fuse to cool.

Waveform (Trace) Mode

Using the internal waveform point storage, you can output provided sine, square, or ramp and triangle wave shapes, or define your own wave shape with up to 512,000 points. The module can output points with a settling time of 40 μs and a 200 kHz point-to-point update rate.

The on-board memory provides storage for you to create up to 32 voltage or current waveforms. You can apply a different waveform to each channel to output. Or you can apply the same waveform to more than one channel. For each channel you can designate the gain, frequency, and/or offset for its output.

The waveforms are stored in volatile memory. Therefore, whenever power to the 34980A is cycled, the volatile memory empties of data it has contained.

The waveform feature of the 34951A is not intended as a full-featured substitute for a function generator, but as a means of storing point-to-point updates.

Clock In

You can configure each DAC channel on the module to synchronize off either an internally-generated 20 MHz clock or the positive edge of an external user-supplied clock.

An external clock must be less than 10 MHz or indeterminate behavior will result. Additionally, as the maximum point-to-point update rate of the DACs is 200 kHz, if you configure a DAC to run off an external clock, you will need to ensure that the correct clock divisor is also configured for that DAC. For example, if you supply a 10 MHz external clock, the minimum clock divisor is 50 because the maximum update rate is 200 kHz. If a clock divisor less than the minimum is configured, indeterminate behavior will results. Thresholds for the Clock In are 5 V TTL tolerant.

Clock Out

There is one clock output on the DAC module, which you can configure to output at frequencies up to 10 MHz. Since it uses a 16-bit clock divisor, the available output frequencies range in steps of 20 MHz/2^{16} with a minimum output frequency of 305 Hz. The output impedance of the Clock Out is 50 Ω.

NOTE The line between external Clock Out and external Clock In is shared. You can use the external Clock Out to provide the external Clock In signal. However, both a user-supplied external clock and the module's Clock Out cannot drive the line at the same time.

Trigger In

You can configure each DAC on the module to trigger off an externally provide Trigger In that has a pulse width greater than 100 ns. The Trigger In line is 5V TTL tolerant.

Trigger Out

The DAC module can source a TTL level Trigger Out. Trigger Out has a pulse width between 5 and 10 µs.

NOTE The line between external Trigger Out and external Trigger In is shared. You can use the external Trigger Out to provide the external Trigger In signal. However, both a user-supplied external trigger and the 34951A Trigger Out cannot drive the line at the same time.

Auto-Calibration

The 34951A features auto-calibration (auto-cal). Upon receipt of the `CALibration:MODule?` command, you can adjust all four channels of the DAC module. The adjustments, performed under complete control of the 34980A, require approximately one minute per module.

WARNING **Because the auto-cal uses the internal DMM, do not route signals on ABus1 when performing an auto-cal of a DAC module. Do not apply a signal to ABus1 via the Analog Bus connector on the rear of the mainframe (pins 4, 5, and 9). The auto-cal will abort if a signal is detected on ABus1.**

Before performing an auto calibration, be sure to allow a one-hour warm-up of the DMM and 34951A module. The adjustment is valid for 90 days for temperatures within 5 ^{o}C of the auto-cal temperature. For the calibration constants to be saved, calibration security must be off. Otherwise, the new calibration constants can be used while power is on. But when power is lost, the DAC module will revert to using the previously stored calibration constants. For SCPI programming examples for the auto-cal, refer to page 6.

34951A SCPI Programming Examples

The programming examples below provide you with SCPI command examples to use for actions specific to the DAC module.

The slot and channel addressing scheme used in these examples follow the form **sccc** where **s** is the mainframe slot number (1 through 8) and **ccc** is the three-digit channel number. Valid channels for this module are 1-4. For information on specific configurations, refer to the simplified schematic on page 8.

For complete information on the SCPI commands used to program the 34980A, refer to the *Agilent 34980A Programmer's Reference* contained on the *34980A Product Reference* CD. For example programs, also refer to the *34980A Product Reference* CD.

Level Mode

Example: Outputting a DC voltage level This command sets the output voltage level for the specified DAC channels. After setting the desired level, send the `OUTPut:STATe` command to close the corresponding output relay and enable outputs from the specified channels. The following command outputs +2.5 V DC on DAC channels 1 and 2 for a module in slot 4.

```
SOURce:VOLTage 2.5,(@4001,4002)
OUTPut:STATe ON,(@4001,4002)
```

Example: Outputting a current level This command sets the output current level on the specified channels on the DAC module. After setting the desired level, send the `OUTPut:STATe` command to close the corresponding output relay and enable outputs from the specified channels. The following command outputs +5 mA on DAC channels 1 and 2 for a module in slot 4 and closes the output relay.

```
SOURce:CURRent 5E-3,(@4001,4002)
OUTPut:STATe ON,(@4001,4002)
```

Waveform Mode

Example: Downloading a waveform to memory and outputting waveform from DACs

The following command segment downloads a 1000-point sine waveform to memory on the module in slot 4 and outputs the waveform from DAC channels 1 and 2. The trace name is `"TEST_SINE"`.

```
TRACe:FUNCtion 4,SINusoid, TEST_SINE, 1000
SOURce:FUNCtion:TRACe TEST_SINE,(@4001,4002)
OUTPut:STATe ON,(@4001,4002)
SOURe:FUNCtion:ENABle ON,(@4001,4002)
```

Example: Downloading trace points to memory and outputting waveform from DACs

The following command segment downloads seven trace points to memory on the module in slot 4 and output the waveform from DAC channels 1 and 2. The trace name is "NEG_RAMP".

```
TRACe:DATA 4,NEG_RAMP, 1, .67, .33, 0, -.33, -.67, -1
SOURce:FUNCtion:TRACe NEG_RAMP,(@4001,4002)
OUTPut:STATe ON,(@4001,4002)
SOURe:FUNCtion:ENABle ON,(@4001,4002)
```

Example: Setting the amplitude of a waveform for offset and gain

The following commands set the offset to 5.25 and the gain to 1.5 on DAC channels 1 and 2 of a module in slot 4.

```
SOURce:MODE VOLTage,(@4001,4002)
SOURce:FUNCtion:VOLTage:OFFSet 5.25,(@4001,4002)
SOURce:FUNCtion:VOLTage:GAIN 1.5,(@4001,4002)
```

Example: Setting cycle count for a waveform The following command segments turn off the trace output mode on DAC channels 1 and 2 in slot 4, set the cycle count to 100, then turn the trace output mode back on.

```
SOURce:FUNCtion:ENABle OFF,(@4001,4002)
SOURce:FUNCtion:TRACe:NCYCles 100,(@4001,4002)
SOURce:FUNCtion:ENABle ON,(@4001,4002)
```

Example: Deleting a waveform The following command deletes the trace named "TEST_WFORM" from the module in slot 4.

```
TRACe:DELete 4,TEST_WFORM
```

External Clock

Example: Selecting an external clock source and setting a clock divisor The first command selects the external clock source on DAC channels 1 and 2 in slot 4. The external clock input is shared between these two channels. The second command sets the clock divisor to 100 on the same DAC channels (the external clock input signal is divided by 100).

```
SOURce:FUNCtion:CLOCk:SOURce EXTernal,(@4001,4002)
SOURce:FUNCtion:CLOCk:EXTernal:DIVisor 100,(@4001,4002)
```

Example: Outputting a clock The following commands set the clock output frequency for slot 4 to 5 kHz and enable the output.

```
SOURce:MODule:CLOCK:FREQuency 5E+3,4
SOURce:MODule:CLOCK:STATE ON,4
```

External Trigger

Example: Selecting the external trigger source and issuing trigger source The following command segment enables the trigger output mode on a DAC module installed in slot 4, then enables the external trigger source on DAC channels 1 and 2. The last command issues an external trigger pulse from the module.

```
SOURce:MODule:TRIGger:OUTPut ON,4
SOURce:FUNCtion:TRIGger:SOURce EXTernal,(@4001,4002)
SOURce:MODule:TRIGger:EXTernal:IMMediate 4
```

Auto Calibration

Example: Performing an auto calibration on all DAC channels This command performs an auto-cal of all four channels on a DAC module. Because the auto-cal takes can take up to one minute per DAC channel, you may want to increase the time-out value of your programming application prior to sending this command.

The following command performs an auto-cal of a DAC module in slot 5 and returns a pass/fail indication.

```
CALibration:MODule? 5
```

The following command performs an auto-cal of all 34951A DAC modules in a mainframe.

```
CALibration:MODule? ALL
```

Example: Effects of using the secure state command on storing calibration constants The following command removes instrument security, and the calibration constants are stored in non-volatile memory if sent before the `CALibration:MODule?` command.

```
CALibration:SECure:STATe OFF <security code>
```

If the instrument is secured at the time of auto-cal, the calibration constants are stored in volatile memory and are lost when power is turned off. The `*RST` command will not discard the calibration constants. The command to secure the instrument is:

```
CALibration:SECure:STATe ON <security code>
```

NOTE The default security code is AT34980.

Configuring a DAC Module

Example: Querying the system for module identify (all modules) The following command returns the identify of the module installed in slot 7.

```
SYSTem:CTYPe? 7
```

Example: Resetting the module(s) to power-on state The following command resets a module in slot 4 to its power-on state.

```
SYST:CPON 4
```

NOTE Using this command will erase any downloaded waveforms.

34951A Simplified Block Diagrams

The following diagram shows how the module is generally configured.

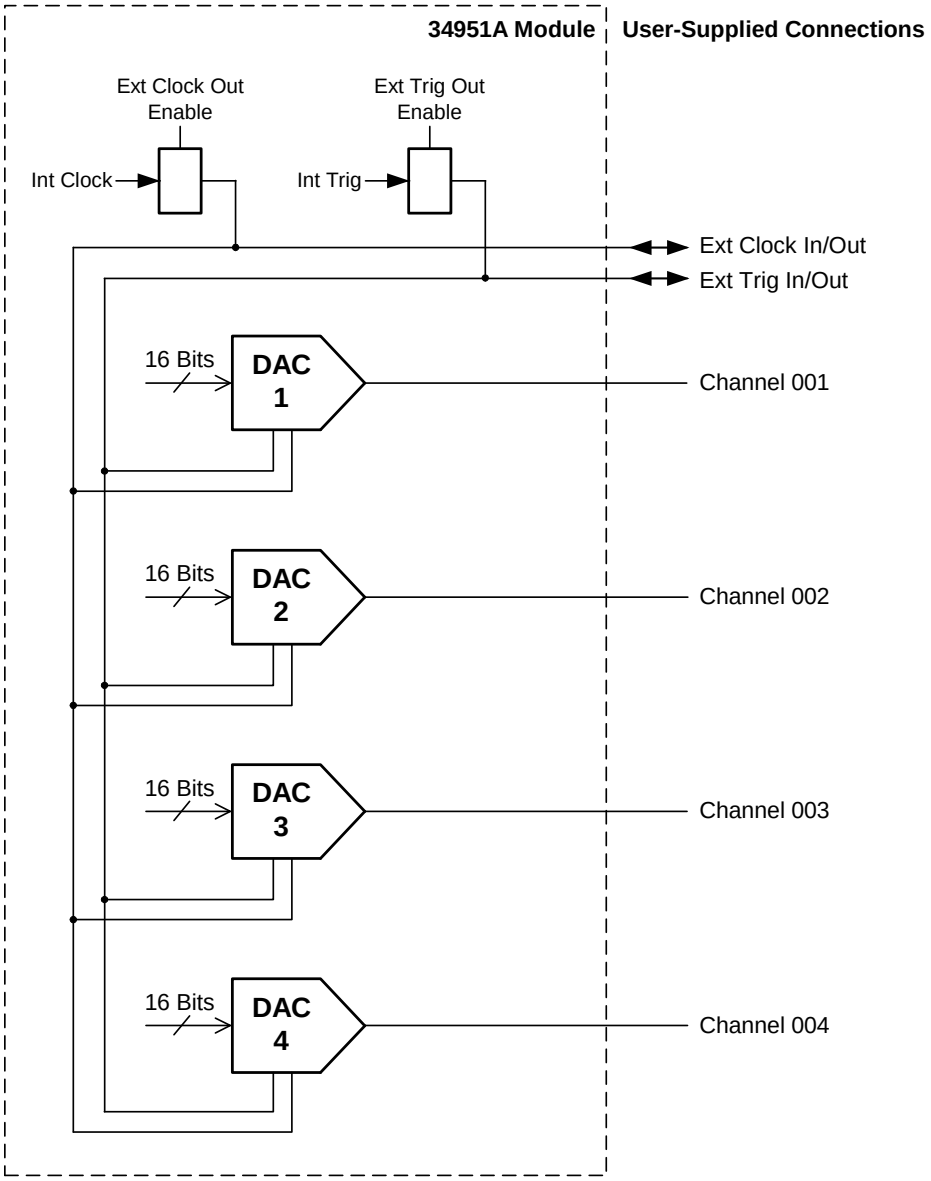

For more detail on the internal configuration of each DAC channel, see the next page.

The following diagram shows individual DAC channel configuration. All channels are configured the same.

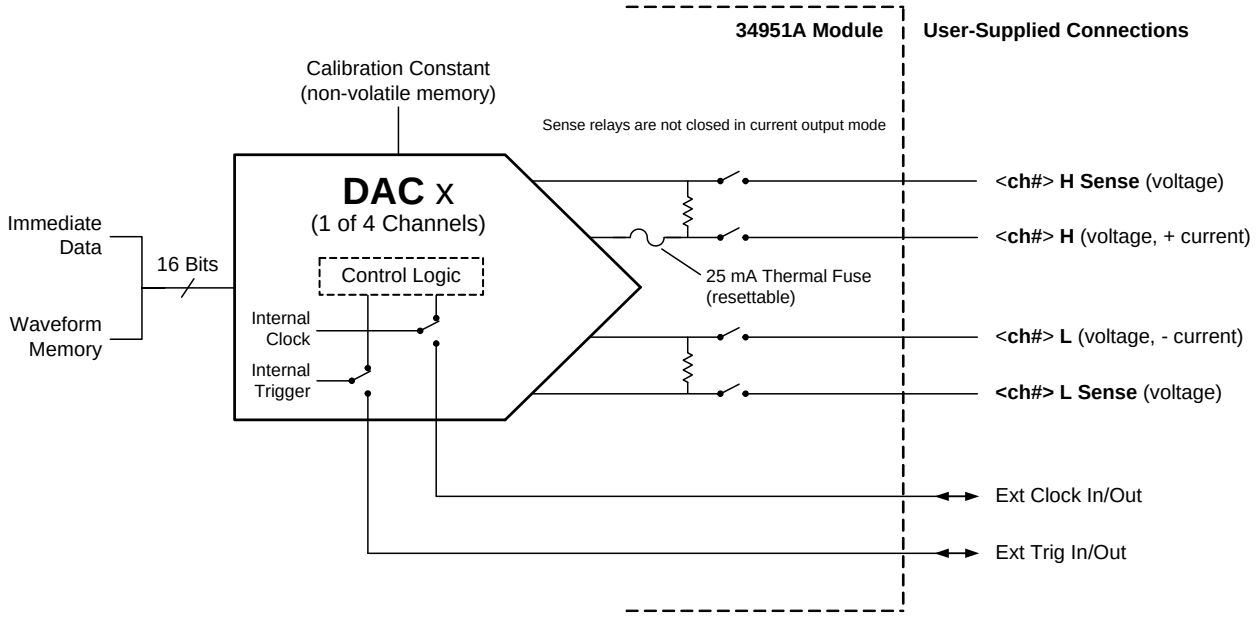

34951A D-Sub Connector Pinout

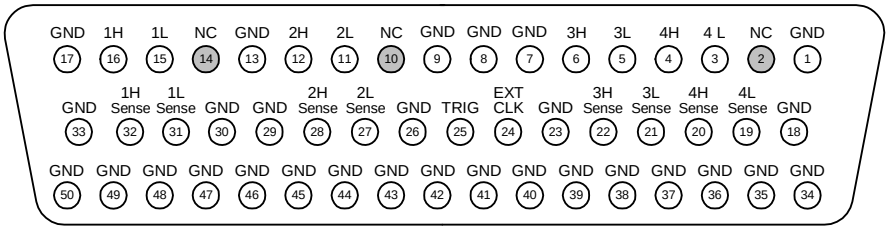

50-Pin D-Sub
Female Connector

Description	Socket	Description	Socket	Description	Socket	Description	Socket	Description	Socket
1L	15	3L Sense	21	GND	8	GND	34	GND	44
1H	16	3H Sense	22	GND	9	GND	35	GND	45
1L Sense	31	4L	3	GND	13	GND	36	GND	46
1H Sense	32	4H	4	GND	17	GND	37	GND	47
2L	11	4L Sense	19	GND	18	GND	38	GND	48
2H	12	4H Sense	20	GND	23	GND	39	GND	49
2L Sense	27	External Clock	24	GND	26	GND	40	GND	50
2H Sense	28	Trigger	25	GND	29	GND	41	No Connect	2
3L	5	GND	1	GND	30	GND	42	No Connect	10
3H	6	GND	7	GND	33	GND	43	No Connect	14

34951T Terminal Block

Each terminal block is labeled with the model number and the abbreviated module name. In addition, space is available on the label for you to write the slot number.

The *34980A Product Reference CD* (shipped with the instrument) contains a 34951T Wiring Log for you to document your wiring configuration for this module. You can open the wiring log file in Microsoft® Excel® or Adobe® Acrobat® format.

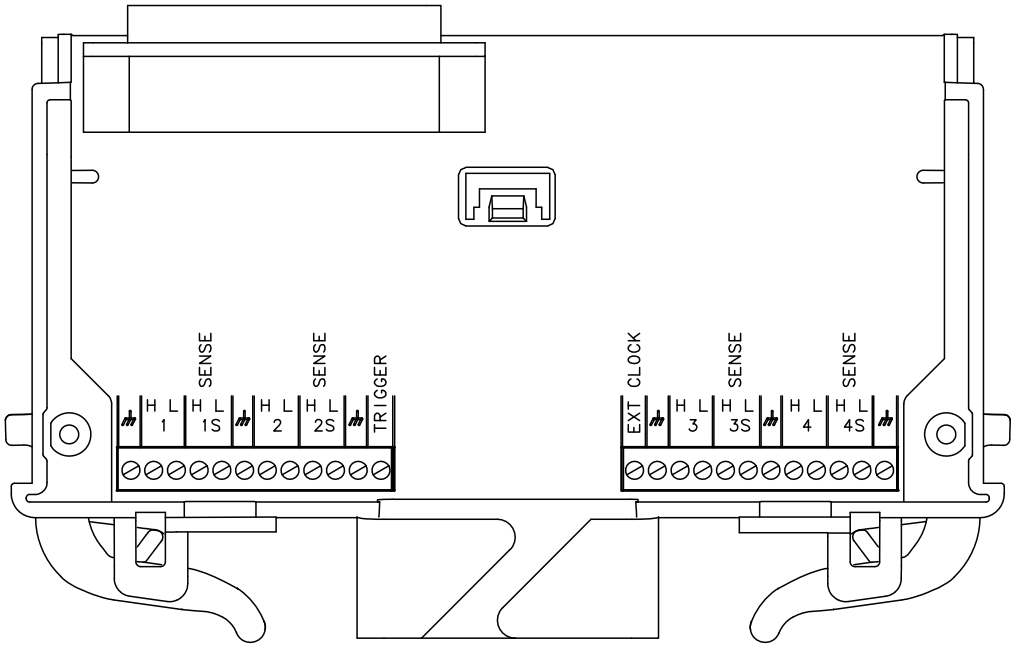

Wire Size:
20 AWG Typical
18 AWG Max

Index

A

auto-calibration, 3

C

calibration, 3
clock input, 2
clock output, 2
connector pinouts, 9

D

description, 1
D-sub pinouts, 9

E

external clock input, 2

M

module description, 1

O

overload fuse, 1

P

pinouts, 9
programming examples, 4

R

remote sensing, 1

S

sense terminals, 1
simplified block diagrams, 8
synchronization, 2

T

terminal block, 10
trigger output source, 3
triggering a DAC, 3

W

warranty, ii
wiring log, 10