Agilent 34401A Multimeter Uncompromising Performance for Benchtop and System Testing

Data Sheet

- Measure up to 1000 volts with 6½ digits resolution
- 0.0015% basic dcV accuracy (24 hour)
- 0.06% basic acV accuracy (1 year)
- 3 Hz to 300 kHz ac bandwidth
- 1000 readings/s direct to GPIB

Superior Performance

The Agilent Technologies 34401A multimeter gives you the performance you need for fast, accurate bench and system testing. The 34401A provides a combination of resolution, accuracy and speed that rivals DMMs costing many times more. 6½ digits of resolution, 0.0015% basic 24-hr dcV accuracy and 1,000 readings/s direct to GPIB assure you of results that are accurate, fast, and repeatable.

Use It on Your Benchtop

The 34401A was designed with your bench needs in mind. Functions commonly associated with bench operation, like continuity and diode test, are built in. A Null feature allows you to remove lead resistance and other fixed offsets in your measurements. Other capabilities like min/max/avg readouts and direct dB and dBm measurements make checkout with the 34401A faster and easier.

The 34401A gives you the ability to store up to 512 readings in internal memory. For trouble-shooting, a reading hold feature lets you concentrate on placing your test leads without having to constantly glance at the display.

Use It for Systems Testing

For systems use, the 34401A gives you faster bus throughput than any other DMM in its class. The 34401A can send up to 1,000 readings/s directly across GPIB in user-friendly ASCII format.

You also get both GPIB and RS-232 interfaces as standard features. Voltmeter Complete and External Trigger signals are provided so you can synchronize to other instruments in your test system. In addition, a TTL output indicates Pass/Fail results when limit testing is used.

To ensure both forward and backward compatibility, the 34401A includes three command languages (SCPI, Agilent 3478A and Fluke 8840A /42A), so you don't have to rewrite your existing test software. An optional rack mount kit is available.

Easy to Use

Commonly accessed attributes, such as functions, ranges, and resolution are selected with a single button press.

Advanced features are available using menu functions that let you optimize the 34401A for your applications.

The included Agilent IntuiLink software allows you to put your captured data to work easily, using PC applications such as Microsoft Excel® or Word® to analyze, interpret, display, print, and document the data you get from the 34401A. You can specify the meter setup and take a single reading or log data to the Excel spreadsheet in specified time intervals. Program-mers can use ActiveX components to control the DMM using SCPI commands. To find out more about IntuiLink, visit www.agilent.com/find/intuilink

1-Year Warranty

With your 34401A, you get full documentation, a high-quality test lead set, calibration certificate with test data, and a 1-year warranty, all for one low price.

Agilent Technologies

Accuracy Specifications ± (% of reading + % of range)[1]

Function	Range[3]	Frequency, etc.	24 Hour[2] 23°C ±1°C	90 Day 23°C ±5°C	1 Year 23°C ±5°C	Temperature Coefficient 0°C – 18°C 28°C – 55°C
DC voltage	100.0000 mV		0.0030 + 0.0030	0.0040 + 0.0035	0.0050 + 0.0035	0.0005 + 0.0005
	1.000000 V		0.0020 + 0.0006	0.0030 + 0.0007	0.0040 + 0.0007	0.0005 + 0.0001
	10.00000 V		0.0015 + 0.0004	0.0020 + 0.0005	0.0035 + 0.0005	0.0005 + 0.0001
	100.0000 V		0.0020 + 0.0006	0.0035 + 0.0006	0.0045 + 0.0006	0.0005 + 0.0001
	1000.000 V		0.0020 + 0.0006	0.0035 + 0.0010	0.0045 + 0.0010	0.0005 + 0.0001
True rms AC voltage[4]	100.0000 mV	3 Hz – 5 Hz	1.00 + 0.03	1.00 + 0.04	1.00 + 0.04	0.100 + 0.004
		5 Hz – 10 Hz	0.35 + 0.03	0.35 + 0.04	0.35 + 0.04	0.035 + 0.004
		10 Hz – 20 kHz	0.04 + 0.03	0.05 + 0.04	0.06 + 0.04	0.005 + 0.004
		20 kHz – 50 kHz	0.10 + 0.05	0.11 + 0.05	0.12 + 0.05	0.011 + 0.005
		50 kHz – 100 kHz	0.55 + 0.08	0.60 + 0.08	0.60 + 0.08	0.060 + 0.008
		100 kHz – 300 kHz[6]	4.00 + 0.50	4.00 + 0.50	4.00 + 0.50	0.20 + 0.02
	1.000000 V to 750.000 V	3 Hz – 5 Hz	1.00 + 0.02	1.00 + 0.03	1.00 + 0.03	0.100 + 0.003
		5 Hz –10 Hz	0.35 + 0.02	0.35 + 0.03	0.35 + 0.03	0.035 + 0.003
		10 Hz – 20 kHz	0.04 + 0.02	0.05 + 0.03	0.06 + 0.03	0.005 + 0.003
		20 kHz – 50 kHz	0.10 + 0.04	0.11 + 0.05	0.12 + 0.04	0.011 + 0.005
		50 kHz – 100 kHz[5]	0.55 + 0.08	0.60 + 0.08	0.60 + 0.08	0.060 + 0.008
		100 kHz – 300 kHz[6]	4.00 + 0.50	4.00 + 0.50	4.00 + 0.50	0.20 + 0.02
Resistance[7]	100.0000 Ω	1 mA Current Source	0.0030 + 0.0030	0.008 + 0.004	0.010 + 0.004	0.0006 + 0.0005
	1.000000 kΩ	1 mA	0.0020 + 0.0005	0.008 + 0.001	0.010 + 0.001	0.0006 + 0.0001
	10.00000 kΩ	100 µA	0.0020 + 0.0005	0.008 + 0.001	0.010 + 0.001	0.0006 + 0.0001
	100.0000 kΩ	10 µA	0.0020 + 0.0005	0.008 + 0.001	0.010 + 0.001	0.0006 + 0.0001
	1.000000 MΩ	5.0 µA	0.002 + 0.001	0.008 + 0.001	0.010 + 0.001	0.0010 + 0.0002
	10.00000 MΩ	500 nA	0.015 + 0.001	0.020 + 0.001	0.040 + 0.001	0.0030 + 0.0004
	100.0000 MΩ	500 nA || 10 MΩ	0.300 + 0.010	0.800 + 0.010	0.800 + 0.010	0.1500 + 0.0002
DC current	10.00000 mA	< 0.1 V Burden Voltage	0.005 + 0.010	0.030 + 0.020	0.050 + 0.020	0.0020 + 0.0020
	100.0000 mA	< 0.6 V	0.010 + 0.004	0.030 + 0.005	0.050 + 0.005	0.0020 + 0.0005
	1.000000 A	< 1.0 V	0.050 + 0.006	0.080 + 0.010	0.100 + 0.010	0.0050 + 0.0010
	3.00000 A	< 2.0 V	0.100 + 0.020	0.120 + 0.020	0.120 + 0.020	0.005 + 0.0020
True rms AC current[4]	1.000000 A	3 Hz – 5 Hz	1.00 + 0.04	1.00 + 0.04	1.00 + 0.04	0.100 + 0.006
		5 Hz – 10 Hz	0.30 + 0.04	0.30 + 0.04	0.30 + 0.04	0.035 + 0.006
		10 Hz – 5 kHz	0.10 + 0.04	0.10 + 0.04	0.10 + 0.04	0.015 + 0.006
	3.00000 A	3 Hz – 5 Hz	1.10 + 0.06	1.10 + 0.06	1.10 + 0.06	0.100 + 0.006
		5 Hz – 10 Hz	0.35 + 0.06	0.35 + 0.06	0.35 + 0.06	0.035 + 0.006
		10 Hz – 5 kHz	0.15 + 0.06	0.15 + 0.06	0.15 + 0.06	0.015 + 0.006
Frequency or period[8]	100 mV to 750 V	3 Hz – 5 Hz	0.10	0.10	0.10	0.005
		5 Hz – 10 Hz	0.05	0.05	0.05	0.005
		10 Hz – 40 Hz	0.03	0.03	0.03	0.001
		40 Hz – 300 kHz	0.006	0.01	0.01	0.001
Continuity	1000.0 Ω	1 mA test current	0.002 + 0.030	0.008 + 0.030	0.010 + 0.030	0.001 + 0.002
Diode test[9]	1.0000 V	1 mA test current	0.002 + 0.010	0.008 + 0.020	0.010 + 0.020	0.001 + 0.002

1. Specifications are for 1 hr warm-up and 6½ digits, slow ac filter.
2. Relative to calibration standards.
3. 20% over range on all ranges except 1000 Vdc and 750 Vac ranges.
4. For sinewave input > 5% of range. For inputs from 1% to 5% of range and < 50 kHz, add 0.1% of range additional error.
5. 750 V range limited to 100 kHz or 8 x 10^7 Volt-Hz.
6. Typically 30% of reading error at 1 MHz.
7. Specifications are for 4-wire ohms function or 2-wire ohms using Math Null. Without Math Null, add 0.2 Ω additional error in 2-wire ohms function.
8. Input >100 mV. For 10 mV to 100 mV inputs multiply % of reading error x10.
9. Accuracy specifications are for the voltage measured at the input terminals only. 1 mA test current is typical. Variation in the current source will create some variation in the voltage drop across a diode junction.

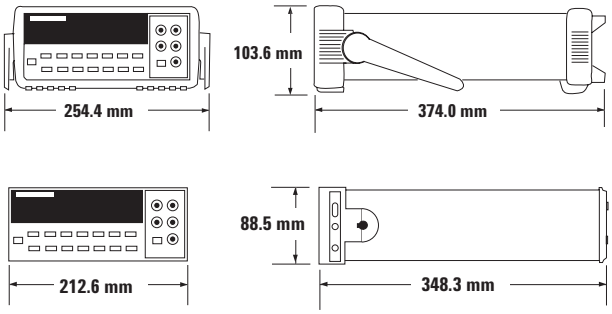

Measurement Characteristics

DC Voltage

Measurement Method:
Continuously integrating multi-slope III A-D converter

A-D Linearity: 0.0002% of reading + 0.0001% of range

Input Resistance:
10 MΩ or 0.1 V, 1 V, 10 V ranges: Selectable > 10,000 MΩ
100 V, 1000 V ranges: 10 MΩ ±1%
Input Bias Current: < 30 pA at 25°C

Input Protection: 1000 V all ranges

dcV:dcV ratio accuracy:
V_{input} Accuracy + $V_{relevance}$ Accuracy

True RMS AC Voltage

Measurement Method:
AC-coupled true rms-measures the ac component of the input with up to 400 Vdc of bias on any range.

Crest Factor:
Maximum of 5:1 at full scale.

Additional Crest Factor errors (non-sinewave):
Crest factor 1-2: 0.05% of reading
Crest factor 2-3: 0.15% of reading
Crest factor 3-4: 0.30% of reading
Crest factor 4-5: 0.40% of reading

Input Impedance:
1 MΩ ± 2% in parallel with 100 pF
Input Protection: 750 Vrms all ranges

Resistance

Measurement Method:
Selectable 4-wire or 2-wire Ohms. Current source referenced to LO input.

Maximum Lead Resistance (4-wire):
10% of range per lead for 100 Ω, 1 kΩ ranges.
1 kΩ per lead on all other ranges.

Input Protection: 1000 V all ranges

DC Current

Shunt Resistance:
5 Ω for 10 mA, 100 mA
0.1 Ω for 1 A, 3 A

Input Protection:
Externally accessible 3 A 250 V fuse
Internal 7 A 250 V fuse

True RMS AC Current

Measurement Method:
Directly coupled to the fuse and shunt. ac coupled true rms measurement (measures the ac component only).

Shunt Resistance:
0.1 Ω for 1 A and 3 A ranges

Input Protection:
Externally accessible 3 A 250 V fuse
Internal 7 A 250 V fuse

Frequency and Period

Measurement Method:
Reciprocal counting technique

Voltage Ranges:
Same as ac voltage function

Gate Time: 1 s, 100 ms, or 10 ms

Continuity/Diode

Response Time:
300 samples/s with audible tone

Continuity Threshold:
Selectable from 1 Ω to 1000 Ω

Measurement Noise Rejection 60 (50) Hz[1]

dc CMRR: 140 dB
ac CMRR: 70 dB

Integration Time and Normal Mode Rejection[2]

100 plc/1.67 s (2 s): 60 dB[3]
10 plc/167 ms (200 ms): 60 dB[3]
1 plc/16.7 ms (20 ms): 60 dB
<1 plc/3 ms or 800 µs): 0 dB

Operating Characteristics[4]

Function	Digits	Reading/s
dcV, dcI, and Resistance	6½	0.6 (0.5)
	6½	6 (5)
	5½	60 (50)
	5½	300
	4½	1000
acV, acI	6½	0.15 slow (3 Hz)
	6½	1 medium (20 Hz)
	6½	10 fast (200 Hz)[5]
	6½	50
Frequency or Period	6½	1
	5½	9.8
	4½	80

Frequency and Period

Configuration rates:	26/s to 50/s
Autorange rate (dc Volts):	>30/s
ASCII readings to RS-232:	55/s
ASCII readings to RS-232:	1000/s
Maximum internal trig rate:	1000/s
Max. ext trig. rate to mem:	1000/s

Triggering and Memory

Reading HOLD Sensitivity:
10%, 1%, 0.1%, or 0.01% of range

Samples/Trigger: 1 to 50,000

Trigger Delay: 0 to 3600 s: 10 µs step size
External Trigger Delay: < 1 ms
External Trigger Jitter: < 500 µs
Memory: 512 readings

Math Functions

NULL, min/max/average, dBm, dB, limit test (with TTL output)

Standard Programming Languages

SCPI (IEEE-488.2), Agilent 3478A, Fluke 8840A/42A

Accessories Included

Test lead kit with probe, alligator and grabber attachments
Operating manual, service manual, test report and power cord

General Specifications

Power Supply:
100 V/120 V/220 V/240 V ±10%

Power Line Frequency:
45 Hz to 66 Hz and 360 Hz to 440 Hz, Automatically sensed at power-on

Power Consumption: 25 VA peak (10 W average)

Operating Environment:
Full accuracy for 0°C to 55°C,
Full accuracy to 80% R.H. at 40°C

Storage Temperature: -40°C to 70°C

Weight: 3.6 kg (8.0 lbs)

Safety: Designed to CSA, UL-1244, IEC-348

RFI and ESD: MIL-461C, FTZ 1046, FCC

Vibration & Shock: MIL-T-28800E, Type III, Class 5 (sine only)

Warranty: 1 year

1. *For 1 kΩ unbalanced in LO lead, ± 500 V peak maximum.*
2. *For power line frequency ± 0.1%.*
3. *For power line frequency ± 0.1% use 40 dB or ± 3% use 30 dB.*
4. *Reading speeds for 60 Hz and (50 Hz) operation.*
5. *Maximum useful limit with default settling delays defeated.*
6. *Speeds are for 4½ digits, delay 0, auto-zero and display OFF.*

Ordering Information

Agilent 34401A multimeter accessories included: Test lead kit with probe, alligator, and grabber attachments, calibration certificate, test report, and power cord. Also includes CD with: IntuiLink software, IVI and VXI PnP drivers, Quick start tutorial, user's guide, command quick reference, service guide, and data sheet.

Options

34401A-A6J
ANSI Z540 compliant calibration

Accessories

Probes/Leads/Clip Accessories
11059A Kelvin probe set
11060A Surface mount device (SMD) test probes
11062A Kelvin clip set
34133A Precision electronic test leads
34134A DC coupled current probe
34136A High voltage probe
34138A Test lead set
34171B Input terminal connector (sold in pairs)
34172B Input calibration short (sold in pairs)
34330A 30 A current shunt
E2308A 5 k thermistor probe
Y1133A Low-thermal external digital multimeter scanning kit

Rack Mount Kits
34190A Rackmount kit: designed for use with only one instrument, mounted on either the left or the right side of the rack.
34191A 2U Dual flange kit: secures the instrument to the front of the rack. This kit can be used with the 34194A dual lock link kit to mount two half-width, 2U height instruments side-by side.
34194A Dual lock link kit: recommended for side-by-side combinations and includes links for instruments of different depths. This kit can be used with the 34191A 2U dual flange kit to mount two half-width, 2U height instruments side-by-side.

Other Accessories
34131A Hard transit case
34161A Accessory pouch
34398A RS-232 cable, 9 pin (f) to 9 pin (f)
E5810A LAN/GPIB gateway

Agilent Advantage Services

Agilent Advantage Services is committed to your success throughout your equipment's lifetime. To keep you competitive, we continually invest in tools and processes that speed up calibration and repair and reduce your cost of ownership. You can also use Infoline Web Services to manage equipment and services more effectively. By sharing our measurement and service expertise, we help you create the products that change our world.

www.agilent.com/find/advantageservices

DEKRA Certified ISO 9001:2008 Quality Management System
www.agilent.com/quality

Agilent Email Updates

www.agilent.com/find/emailupdates
Get the latest information on the products and applications you select.

LXI
www.lxistandard.org
LAN eXtensions for Instruments puts the power of Ethernet and the Web inside your test systems. Agilent is a founding member of the LXI consortium.

Agilent Channel Partners

www.agilent.com/find/channelpartners
Get the best of both worlds: Agilent's measurement expertise and product breadth, combined with channel partner convenience.

For more information on Agilent Technologies' products, applications or services, please contact your local Agilent office. The complete list is available at:

www.agilent.com/find/contactus

Americas

Canada	(877) 894 4414
Brazil	(11) 4197 3600
Mexico	01800 5064 800
United States	(800) 829 4444

Asia Pacific

Australia	1 800 629 485
China	800 810 0189
Hong Kong	800 938 693
India	1 800 112 929
Japan	0120 (421) 345
Korea	080 769 0800
Malaysia	1 800 888 848
Singapore	1 800 375 8100
Taiwan	0800 047 866
Other AP Countries	(65) 375 8100

Europe & Middle East

Belgium	32 (0) 2 404 93 40
Denmark	45 45 80 12 15
Finland	358 (0) 10 855 2100
France	0825 010 700*
	*0.125 €/minute
Germany	49 (0) 7031 464 6333
Ireland	1890 924 204
Israel	972-3-9288-504/544
Italy	39 02 92 60 8484
Netherlands	31 (0) 20 547 2111
Spain	34 (91) 631 3300
Sweden	0200-88 22 55
United Kingdom	44 (0) 118 927 6201

For other unlisted countries:
www.agilent.com/find/contactus
Revised: January 6, 2012

Product specifications and descriptions in this document subject to change without notice.

© Agilent Technologies, Inc. 2012
Published in USA, April 24, 2012
5968-0162EN

Agilent Technologies