Agilent
Solutions for Measuring Permittivity and Permeability with LCR Meters and Impedance Analyzers

Application Note 1369-1

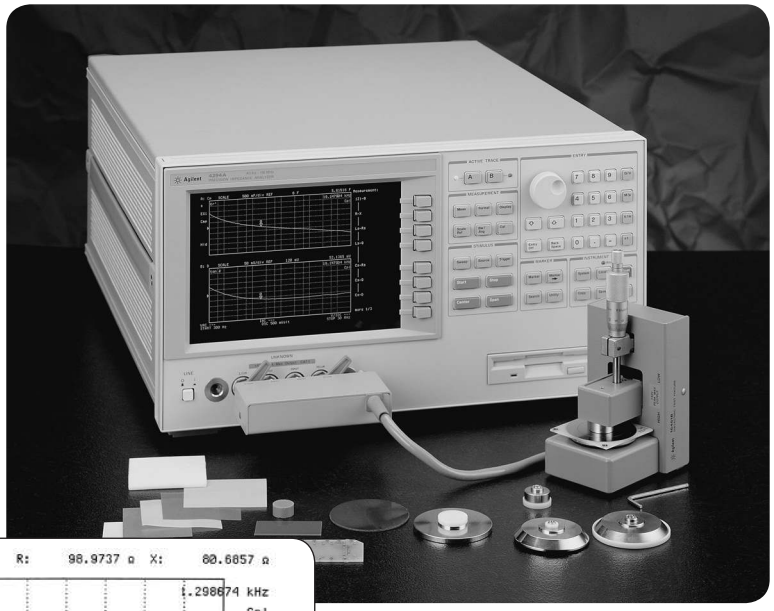

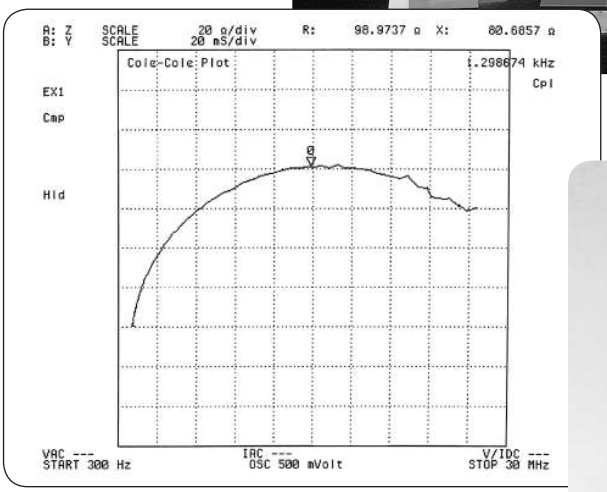

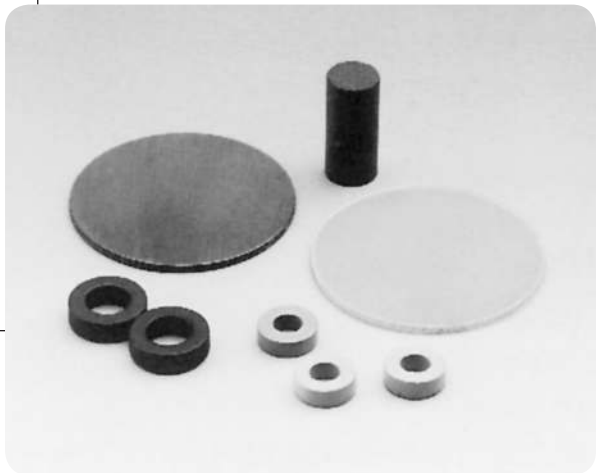

Anticipate ___Accelerate ___Achieve

Agilent Technologies

Solutions for Measuring Permittivity and Permeability with LCR Meters and Impedance Analyzers

Application Note 1369-1

1. Introduction . . . 3
2. Permittivity Evaluation . . . 4
   2.1. Definition of permittivity . . . 4
   2.2. Parallel plate measurement method . . . 5
   2.3. Permittivity measurement system . . . 8
   2.4. Measurement system using the 16451B dielectric test fixture . . . 8
   2.5. Measurement system using the 16453A dielectric test fixture . . . 13
3. Permeability Evaluation . . . 17
   3.1. Definition of permeability . . . 17
   3.2. Inductance measurement method . . . 17
   3.3. Permeability measurement system . . . 18
   3.4. Measurement system using the 16454A magnetic material test fixture . . . 18
4. Conclusion . . . 20

Appendix . . . 21
A. Permittivity Evaluation of Liquids . . . 21
   A.1. Measurement system using the 16452A liquid test fixture . . . 21
      A.1.1. Main advantages . . . 21
      A.1.2. Applicable MUT . . . 21
      A.1.3. Structure . . . 21
      A.1.4. Principal specifications . . . 22
      A.1.5. Operation method . . . 23
      A.1.6. Special considerations . . . 23

References . . . 24

1. Introduction

Recently, electronic equipment technology has dramatically evolved to the point where an electronic component's material characteristics becomes a key factor in a circuit's behavior. For example, in the manufacture of high capacitance multilayer ceramic capacitors (MLCCs), which are being used more in digital (media) appliances, employing high κ (dielectric constant) material is required. In addition, various electrical performance evaluations, such as frequency and temperature response, must be performed before the materials are selected.

In fields outside of electronic equipment, evaluating the electrical characteristics of materials has become increasingly popular. This is because composition and chemical variations of materials such as solids and liquids can adopt electrical characteristic responses as substituting performance parameters.

A material evaluation measurement system is comprised of three main pieces. These elements include: precise measurement instruments, test fixtures that hold the material under test, and software that can calculate and display basic material parameters, such as permittivity and permeability. Various measurement methods for permittivity and permeability currently exist (see Table 1). However, this note's primary focus will be on methods that employ impedance measurement technology, which have the following advantages:

- Wide frequency range from 20 Hz to 1 GHz
- High measurement accuracy
- Simple preparations (fabrication of material, measurement setup) for measurement

This note begins by describing measurement methods, systems, and solutions for permittivity in Section 2, followed by permeability in Section 3. The resistivity measurement system and the permittivity measurement system for liquids are described later in the appendix.

Table 1. Measurement technology and methods for permittivity and permeability parameters

Measurement parameter	Measurement technology	Measurement method
Permittivity	Impedance analysis	Parallel plate
	Network analysis	Reflection wave
		S parameters
		Cavity
		Free space
Permeability	Impedance analysis	Inductance
	Network analysis	Reflection wave
		S parameters
		Cavity

2. Permittivity Evaluation

2.1. Definition of permittivity

Permittivity describes the interaction of a material with an electric field. The principal equations are shown in Figure 1. Dielectric constant (κ) is equivalent to the complex relative permittivity (ε_r^*) or the complex permittivity (ε^*) relative to the permittivity of free space (ε_0). The real part of complex relative permittivity (ε_r') is a measure of how much energy from an external field is stored in a material; $\varepsilon_r' > 1$ for most solids and liquids. The imaginary part of complex relative permittivity (ε_r'') is called the loss factor and is a measure of how dissipative or lossy a material is to an external field. ε_r'' is always > 0 and is usually much smaller than ε_r'. The loss factor includes the effects of both dielectric loss and conductivity.

When complex permittivity is drawn as a simple vector diagram as shown in Figure 1, the real and imaginary components are 90° out of phase. The vector sum forms an angle δ with the real axis (ε_r'). The tangent of this angle, tan δ or loss tangent, is usually used to express the relative "lossiness" of a material. The term "dielectric constant" is often called "permittivity" in technical literature. In this application note, the term permittivity will be used to refer to dielectric constant and complex relative permittivity.

$$\kappa^* = \varepsilon^*_r = \frac{\varepsilon^*}{\varepsilon_0} = \underset{\text{(Real part)}}{\varepsilon'_r} - j\,\underset{\text{(Imaginary part)}}{\varepsilon''_r} = \left(\frac{\varepsilon'}{\varepsilon_0}\right) - j\left(\frac{\varepsilon''}{\varepsilon_0}\right)$$

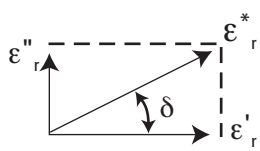

$$\tan\delta = \frac{\varepsilon_r''\ \text{(Imaginary)}}{\varepsilon_r'\ \text{(Real)}}$$

$$\tan\delta = D \text{ (Dissibation factor)}$$

κ^* = Dielectic constant

ε^*_r = Complex relative permitivity

ε_0 = Permitivity of free space $\left(\frac{1}{36\pi} \times 10^{-9}\ [\text{F/m}]\right)$

Figure 1. Definition of relative complex permittivity (ε_r^*)

2.2. Parallel plate measurement method of measuring permittivity

When using an impedance-measuring instrument to measure permittivity, the parallel plate method is usually employed. An overview of the parallel plate method is shown in Figure 2.

The parallel plate method, also called the three terminal method in ASTM D150, involves sandwiching a thin sheet of material or liquid between two electrodes to form a capacitor. (Note: Throughout the remainder of this document materials under test, whether the material is a solid or a liquid, will be referred to as MUT.) The measured capacitance is then used to calculate permittivity. In an actual test setup, two electrodes are configured with a test fixture sandwiching dielectric material. The impedance-measuring instrument would measure vector components of capacitance (C) and dissipation (D) and a software program would calculate permittivity and loss tangent.

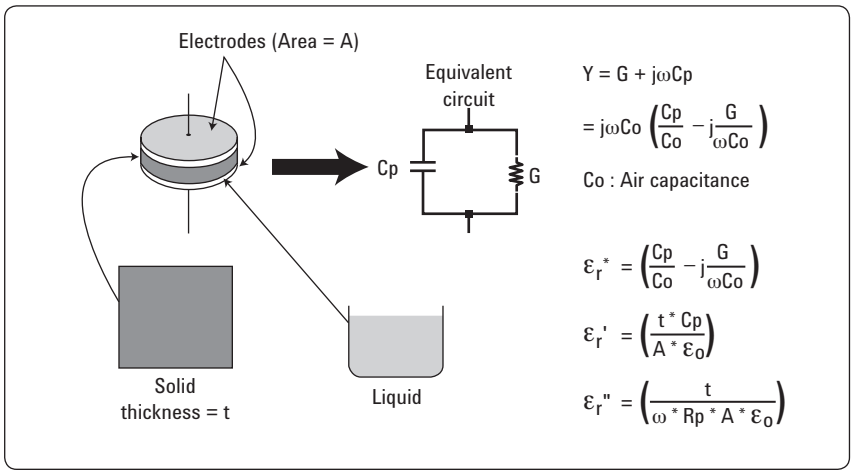

Figure 2. Parallel plate method

The flow of the electrical field in an actual measurement is shown in Figure 3. When simply measuring the dielectric material between two electrodes, stray capacitance or edge capacitance is formed on the edges of the electrodes and consequently the measured capacitance is larger than the capacitance of the dielectric material. The edge capacitance causes a measurement error, since the current flows through the dielectric material and edge capacitor.

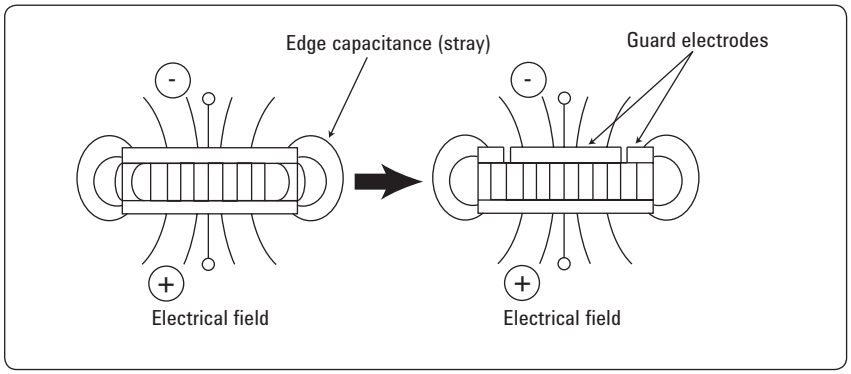

Figure 3. Effect of guard electrode

A solution to the measurement error caused by edge capacitance is to use the guard electrode. The guard electrode absorbs the electric field at the edge and the capacitance that is measured between the electrodes is only composed of the current that flows through the dielectric material. Therefore, accurate measurements are possible. When the main electrode is used with a guard electrode, the main electrode is called the guarded electrode.

Contacting electrode method:

This method derives permittivity by measuring the capacitance of the electrodes contacting the MUT directly (see Figure 4). Permittivity and loss tangent are calculated using the equations below:

C_p: Equivalent parallel capacitance of MUT [F]
D: Dissipation factor (measured value)
t_m: Average thickness of MUT [m]
A: Guarded electrode's surface area[m^2]
d: Guarded electrode's diameter[m]
ε_0: Permittivity of free space = 8.854×10^{-12} [F/m]

Equations:

$$\varepsilon_r = \frac{t_m \times C_p}{A \times \varepsilon_0} = \frac{t_m \times C_p}{\pi\left(\frac{d}{2}\right)^2 \times \varepsilon_0}$$

$\tan \delta = D$

The contacting electrode method requires no material preparation and the operation involved when measuring is simple. Therefore, it is the most widely used method. However, a significant measurement error can occur if airgap and its effects are not considered when using this method.

When contacting the MUT directly with the electrodes, an airgap is formed between the MUT and the electrodes. No matter how flat and parallel both sides of the MUT are fabricated, an airgap will still form.

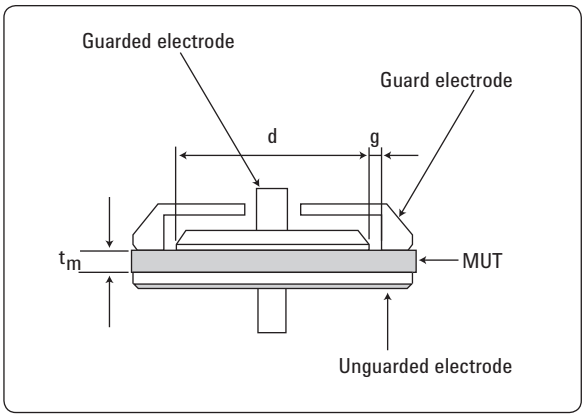

Figure 4. Contacting electrode method

This airgap is the cause for measurement error because the measured capacitance will be the series connection of the capacitance of the dielectric material and the airgap. The relationship between the airgap's thickness and measurement error is determined by the equation shown in Figure 5.

Measurement error is a function of the relative permittivity ($\varepsilon r'$) of the MUT, thickness of the MUT (tm), and the airgap's thickness (ta). Sample results of measurement error have been calculated in Table 2. Notice that the effect is greater with thin materials and high κ materials.

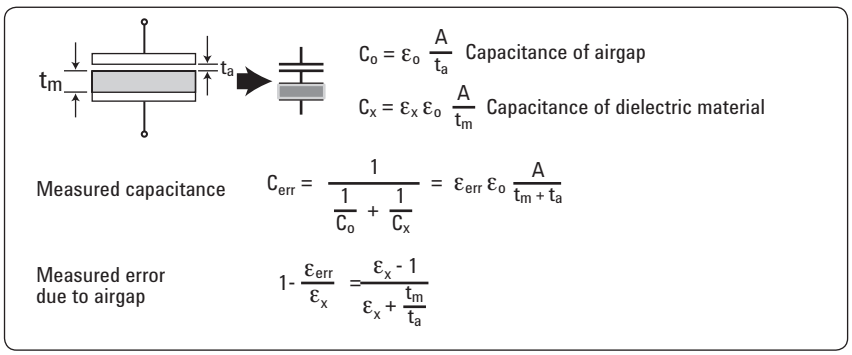

Figure 5. Airgap effects

Table 2. Measurement error caused by airgap

t_a / t_m \ ε_r'	2	5	10	20	50	100
0.001	0.1%	0.4%	1%	2%	5%	9%
0.005	0.5%	2%	4%	9%	20%	33%
0.01	1%	4%	8%	16%	33%	50%
0.05	5%	16%	30%	48%	70%	83%
0.1	8%	27%	45%	63%	82%	90%

This airgap effect can be eliminated, by applying thin film electrodes to the surfaces of the dielectric material.

An extra step is required for material preparation (fabricating a thin film electrode), but the most accurate measurements can be performed.

Non-contacting electrode method

This method was conceptualized to incorporate the advantages and exclude the disadvantages of the contacting electrode method. It does not require thin film electrodes, but still solves the airgap effect. Permittivity is derived by using the results of two capacitance measurements obtained with the MUT and without it (Figure 6).

Theoretically, the electrode gap (t_g) should be a little bit larger than the thickness of the MUT (t_m). In other words, the airgap ($t_g - t_m$) should be extremely small when compared to the thickness of the MUT (t_m). These requirements are necessary for the measurement to be performed appropriately. Two capacitance measurements are necessary, and the results are used to calculate permittivity. The equation is shown at right.

C_{s1}: Capacitance without MUT inserted[F]
C_{s2}: Capacitance with MUT inserted[F]
D_1: Dissipation factor without MUT inserted
D_2: Dissipation factor with MUT inserted
t_g : Gap between guarded/guard electrode and unguarded electrode [m]
t_m: Average thickness of MUT [m]

Equations:

$$\varepsilon_r' = \frac{1}{1-\left(1-\frac{C_{s1}}{C_{s2}}\right) \times \frac{t_g}{t_m}}$$

$$\tan\delta = D_2 + \varepsilon_r' \times (D_2 - D_1) \times \left(\frac{t_g}{t_m} - 1\right) \text{ (when } \tan\delta \ll 1\text{)}$$

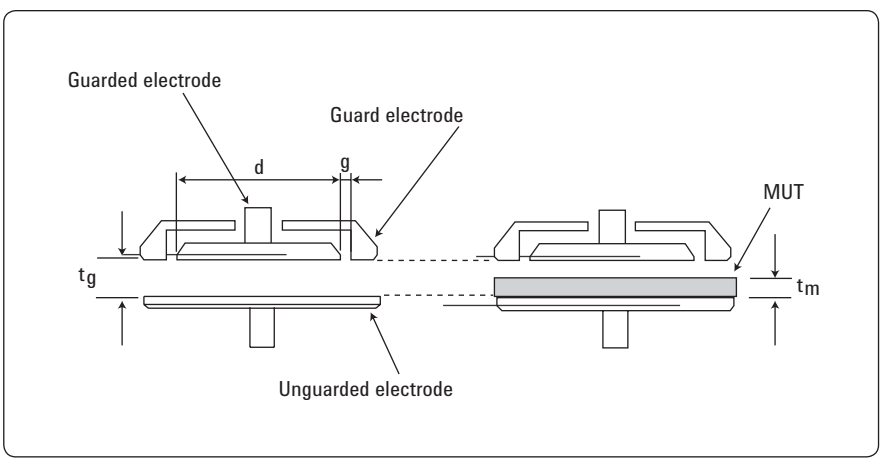

Figure 6. Non-contacting electrode method

Table 3. Comparison of parallel plate measurement methods

Method	Contacting electrode (without thin film electrode)	Non-contacting electrode	Contacting electrode (with thin film electrode)
Accuracy	LOW	MEDIUM	HIGH
Application MUT	Solid material with a flat and smooth surface	Solid material with a flat and smooth surface	Thin film electrode must be applied onto surfaces
Operation	1 measurement	2 measurements	1 measurement

2.3. Permittivity measurement system

Two measurement systems that employ the parallel plate method will be discussed here. The first is the 16451B dielectric test fixture, which has capabilities to measure solid materials up to 30 MHz. The latter is the 16453A dielectric material test fixture, which has capabilities to measure solid materials up to 1 GHz. Details of measurement systems described in this note will follow the subheadings outlined below:

1) Main advantages
2) Applicable MUT
3) Structure
4) Principal specifications
5) Operation method
6) Special considerations
7) Sample measurements

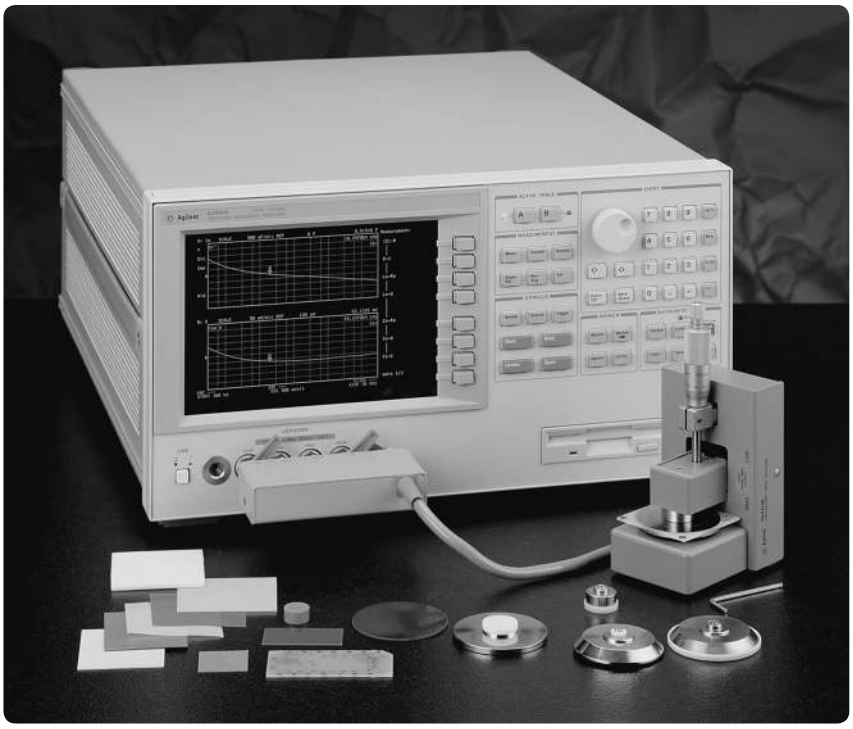

Applicable measurement instruments: 4294A, 4285A, E4980A, 4263B, 4268A, 4288A, and E4981A

2.4. Measurement system using the 16451B dielectric test fixture

2.4.1. Main advantages

- Precise measurements are possible in the frequency range up to 30 MHz
- Four electrodes (A to D) are provided to accommodate the contacting and non-contacting electrode methods and various MUT sizes
- Guard electrode to eliminate the effect of edge capacitance
- Attachment simplifies open and short compensation
- Can be used with any impedance-measuring instrument with a 4-terminal pair configuration

2.4.2. Applicable MUT

The applicable dielectric material is a solid sheet that is smooth and has equal thickness from one end to the other. The applicable dielectric material's size is determined by the measurement method and type of electrode to be used. Electrodes A and B are used for the contacting electrode method without the fabrication of thin film electrodes. Electrodes C and D are used for the contacting electrode method with the fabrication of thin film electrodes. When employing the non-contacting electrode method, electrodes A and B are used. In this method, it is recommended to process the dielectric material to a thickness of a few millimeters.

The difference between electrodes A and B is the diameter (the same difference applies to electrodes C and D). Electrodes A and C are adapted for large MUT sizes, and electrodes B and D are adapted for smaller MUT sizes. The applicable MUT sizes for each electrode are shown in Tables 4 and 5. The dimensions of each electrode are shown in Figures 7 through 10.

Table 4. Applicable MUT sizes for electrodes A and B

Electrode type	Material diameter	Material thickness	Electrode diameter
A	40 mm to 56 mm	t ≤ 10 mm	38 mm
B	10 mm to 56 mm	t ≤ 10 mm	5 mm

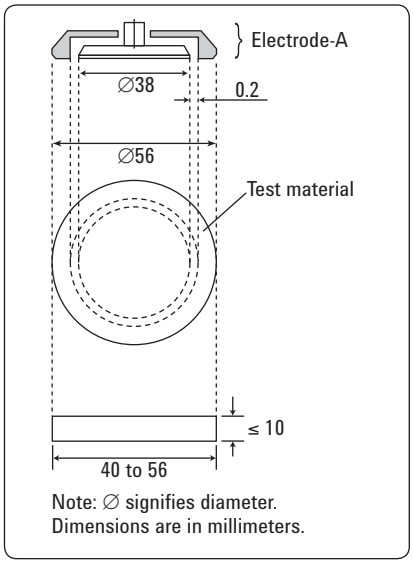

Figure 7. Electrode A dimensions

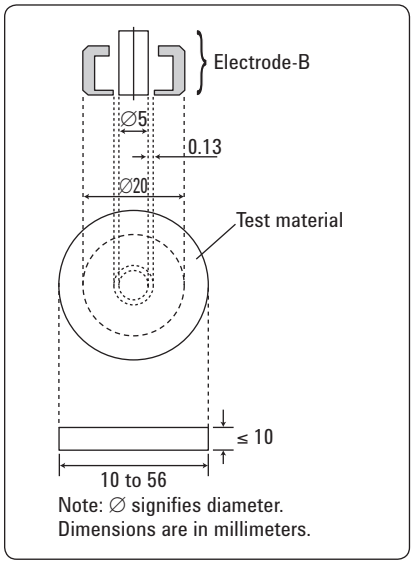

Figure 8. Electrode B dimensions

Table 5. Applicable MUT sizes for electrodes C and D

Electrode type	Material diameter	Material thickness	Electrode diameter*
C	56 mm	t ≤ 10 mm	5 to 50 mm
D	20 mm to 56 mm	t ≤ 10 mm	5 to 14 mm

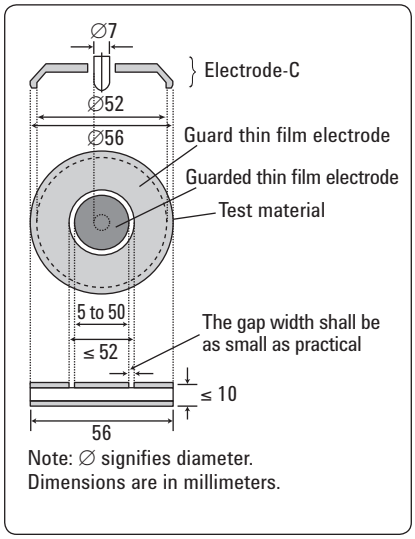

Figure 9. Electrode C dimensions

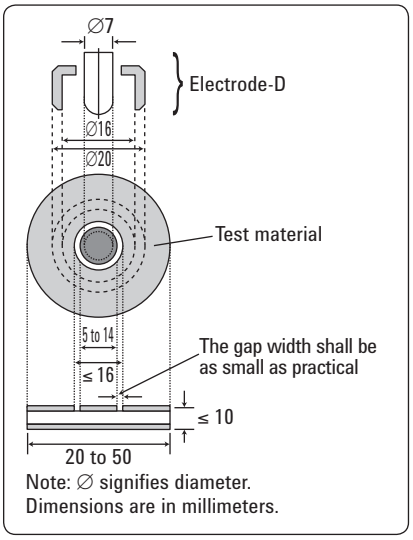

Figure 10. Electrode D dimensions

*Diameter of applied thin film electrodes on surfaces of dielectric material

2.4.3. Structure

In order to eliminate the measurement error caused by edge capacitance, a three-terminal configuration (including a guard terminal) is employed. The structure of the 16451B is shown in Figure 11.

The electrodes in the 16451B are made up of the following:

1. Unguarded electrode, which is connected to the measurement instrument's high terminal.
2. Guarded electrode, which is connected to the measurement instrument's low terminal.
3. Guard electrode, which is connected to the measurement instrument's guard terminal (the outer conductor of the BNC connectors).

The guard electrode encompasses the guarded (or main) electrode and absorbs the electric field at the edge of the electrodes, making accurate permittivity measurements possible.

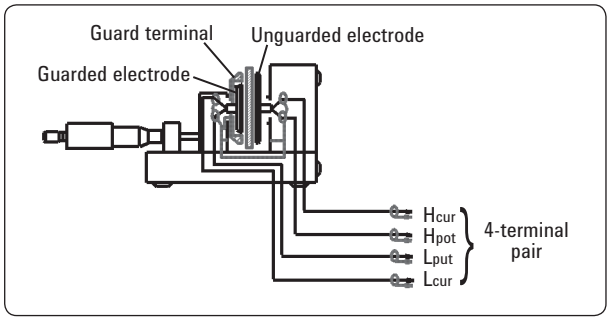

Figure 11. Structure of the 16451B

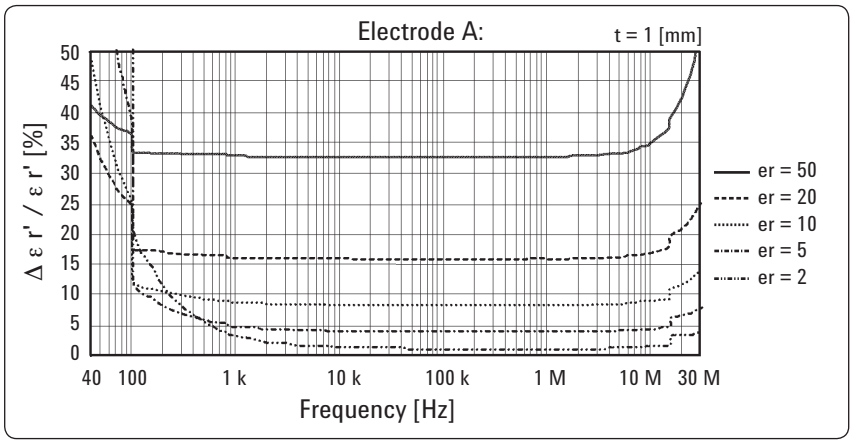

Figure 12. Permittivity measurement accuracy (supplemental data)

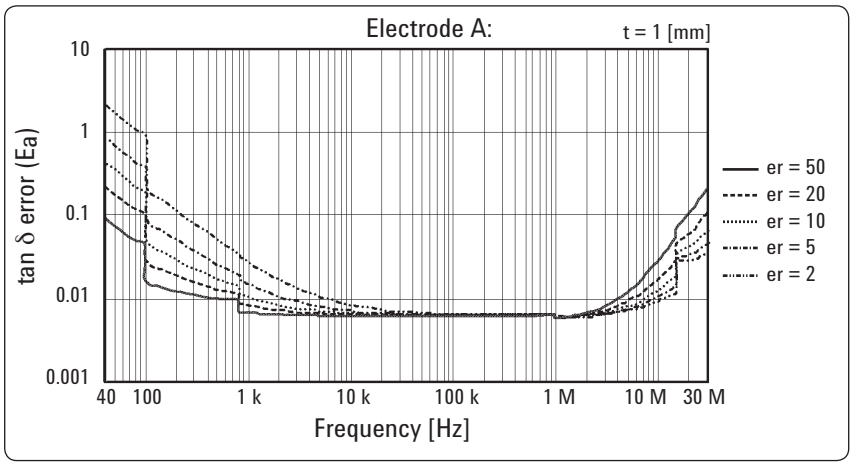

Figure 13. Loss tangent measurement accuracy (supplemental data)

2.4.4. Principal specifications

Table 6. Principal specifications of the 16451B

Frequency	≤ 30 MHz
Max voltage	±42 V
Operation temperature	0 °C to 55 °C
Terminal configuration	4-terminal pair, BNC
Cable length	1 m
Compensation	Open/short*

The principal specifications are shown in Table 6. Figures 12 and 13 show the measurement accuracy when Agilent's 4294A is used. Further details about the measurement accuracy can be obtained from the *Accessories Selection Guide for Impedance Measurements* (literature number 5965-4792E)

*When using the 4285A or 4294A above 5 MHz, it is necessary to perform load compensation in addition to open and short compensation. For more details, please refer to Section 2.4.5 Operation method.

2.4.5. Operation method

Figure 14 displays the flowchart when using the 16451B for permittivity measurements. Each step in the flowchart is described here:

Step 1. Prepare the dielectric material: Fabricate the MUT to the appropriate size. Use Figures 7 through 10 as references. If the contacting electrode method with thin film electrodes is employed, apply thin film electrodes to the surfaces of the MUT.

Step 2. Attach the guarded electrode: Select the appropriate electrode and fit it into the 16451B.

Step 3. Connect the 16451B: Connect the 16451B to the unknown terminals of the measurement instrument.

Step 4. Cable length compensation: Set the measurement instrument's cable length compensation function to 1 m. Refer to the measurement instrument's operation manual for the setting procedure.

Step 5. Compensate the residual impedance of the 16451B: Use the furnished attachment to perform open and short compensation at a specified frequency. This is necessary before adjusting the guarded and unguarded electrodes to be parallel to each other.

Step 6. Adjust the electrodes: To enhance the measurement performance, a mechanism is provided to adjust the guarded and unguarded electrodes to be parallel to each other. By performing this adjustment, the occurrence of the airgap when using the contacting electrode method is minimized and an airgap with uniform thickness is created when using the non-contacting electrode method. The adjustment procedure is discussed in the operation manual of the 16451B.

Step 7. Set the measurement conditions: Measurement conditions such as frequency and test voltage level are set on the measurement instrument. Refer to the measurement instrument's operation manual for the setting procedure.

Step 8. Compensate the residual impedance of the 16451B: Use the furnished attachment to perform open and short compensation of the measurement conditions set in Step 7.

When using the Agilent 4285A or 4294A above 5 MHz, it is necessary to perform load compensation also. This is because for high frequency measurements, it is difficult to disregard the residual impedance, which cannot be removed by open and short compensation.

In order to compensate the frequency response of the 16451B, a measured value at 100 kHz is used as a standard value and load compensation is performed at high frequencies. The air capacitance formed by creating an airgap between the electrodes (with nothing inserted) is adopted as the load device for the 16451B. Table 7 lists the recommended capacitance values that are obtained by adjusting the height of the airgap between the electrodes. It is assumed that the air capacitance has no frequency dependency, no loss and has a flat response. The capacitance value (Cp) at 100 kHz (G is assumed to be zero) is used for load compensation.

Step 9. Insert MUT: Insert the MUT between the electrodes.

Step 10. Cp-D measurement: The capacitance (Cp) and dissipation factor (D) is measured. When employing the non-contacting electrode method, two Cp-D measurements are performed, with and without the MUT.

Step 11. Calculate permittivity: As previously discussed in Section 2.2, use the appropriate equation to calculate permittivity.

When using the 4294A as the measurement instrument, a sample IBASIC program, which follows the steps described above, is available. The sample program is furnished, on floppy disk, with the operation manual of the 4294A.

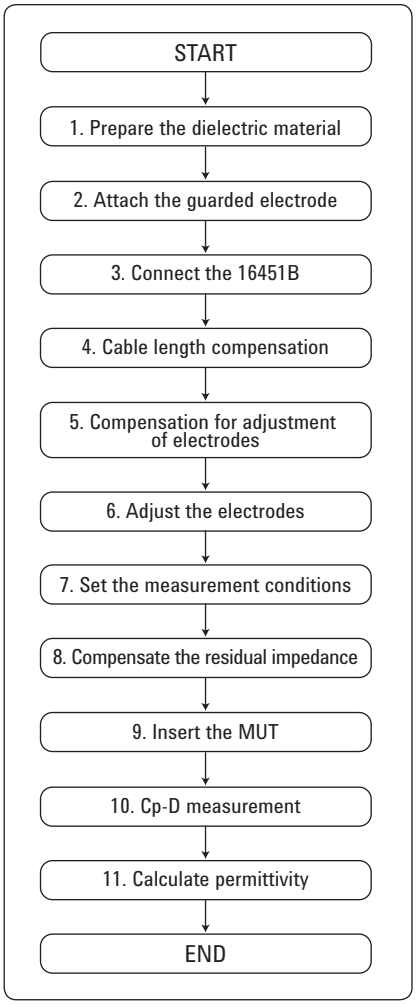

Figure 14. Measurement procedure flowchart for the 16451B

Table 7. Load values

Electrode	Recommended capacitance*
A	50 pF ± 0.5 pF
B	5 pF ± 0.05 pF
C, D	1.5 pF ± 0.05 pF

* Measured Cp value at 100 kHz

2.4.6 Special considerations

As mentioned before, to reduce the effect of the airgap, which occurs between the MUT and the electrodes, it is practical to employ the contacting electrode method with thin film electrodes (Refer to Section 2.2). Electrodes C and D are provided with the 16451B to carry out this method.

Materials under test that transform under applied pressure cannot keep a fixed thickness. This type of MUT is not suitable for the contacting electrode method. Instead, the non-contacting method should be employed.

When the non-contacting method is employed, the electrode gap t_g is required to be at most 10% larger than the thickness of the MUT. It is extremely difficult to create a 10% electrode gap with thin film materials. Therefore, it is recommended that only materials thicker than a few millimeters be used with this method.

The micrometer on the 16451B is designed to make a precise gap when using the non-contacting electrode method. Accurate measurements of the thickness of MUT cannot be made, when employing the contacting electrode method. This is because the micrometer scale is very dependent upon the guard and the unguarded electrodes being parallel. Using a separate micrometer for measuring thickness is recommended.

2.4.7. Sample measurements

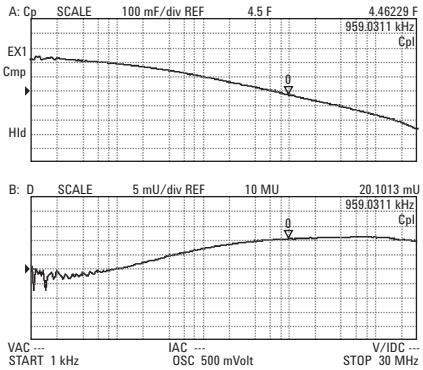

4294A Settings:
- Osc. level: 500 mV
- Frequency: 1 kHz to 30 MHz
- Parameters: ε_r' vs. tan δ
- BW: 5
- Compensation: Open, short and load
- Load std. : Air capacitance (5 pF)

16451B Settings:
- Electrode: B
- Contacting electrode method

Figure 15. Frequency response of printed circuit board

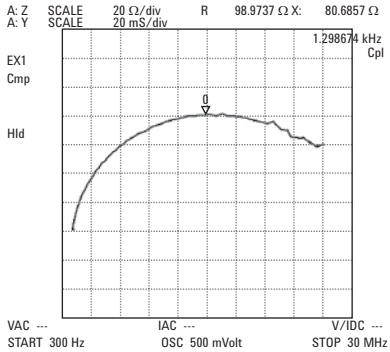

4294A Settings:
- Osc. level: 500 mV
- Frequency: 300 Hz to 30 MHz
- Parameters: ε_r' vs. ε_r''
- BW: 5
- Compensation: Open, short and load
- Load std. : Air capacitance (1.5 pF)

16451B Settings:
- Electrode: C
- Contacting electrode method with thin film electrodes

Figure 16. Cole-Cole plot of a ceramic material

2.5. Measurement system using the 16453A dielectric material test fixture

2.5.1. Main advantages

- Wide frequency range from 1 MHz – 1 GHz
- Option E4991A-002 (material measurement software) internal firmware in the E4991A solves edge capacitance effect
- Open, short and load compensation
- Direct readouts of complex permittivity are possible with the Option E4991A-002 (material measurement software) internal firmware in the E4991A.
- Temperature characteristics measurements are possible from –55 °C to +150 °C (with Options E4991A-002 and E4991A-007).

* For temperature-response evaluation, Option E4991A-007 temperature characteristic test kit is required. A heat-resistant cable, that maintains high accuracy, and a program for chamber control and data analysis are included with Option E4991A-007.

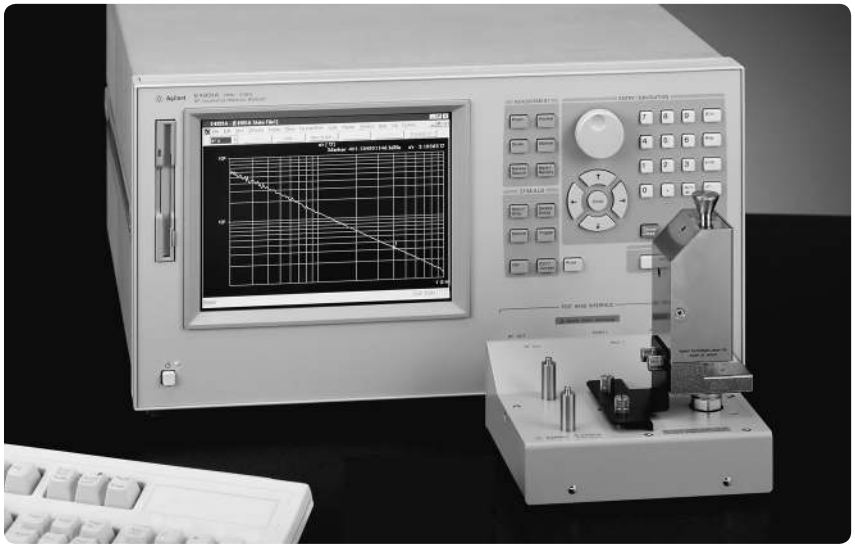

Applicable measurement instruments: E4991A (Option E4991A-002)*

2.5.2. Applicable MUT

The applicable dielectric material is a solid sheet that is smooth and has equal thickness from one end to the other. The applicable MUT size is shown in Figure 17.

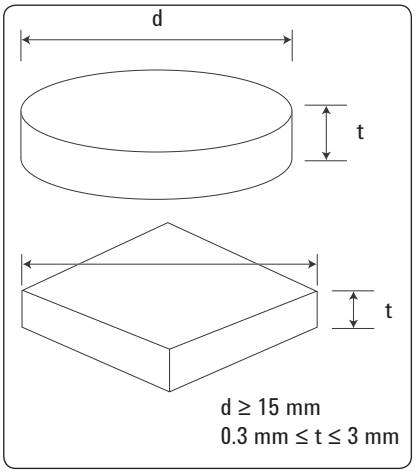

Figure 17. Applicable MUT size

2.5.3. Structure

The structure of the 16453A can be viewed in Figure 18. The upper electrode has an internal spring, which allows the MUT to be fastened between the electrodes. Applied pressure can be adjusted as well.

The 16453A is not equipped with a guard electrode like the 16451B. This is because a guard electrode at high frequency only causes greater residual impedance and poor frequency characteristics. To lessen the effect of edge capacitance, a correction function based on simulation results is used in the E4991A, Option E4991A-002 (material measurement) firmware.

Also, residual impedance, which is a major cause for measurement error, cannot be entirely removed by open and short compensation. This is why PTFE is provided as a load compensation device.

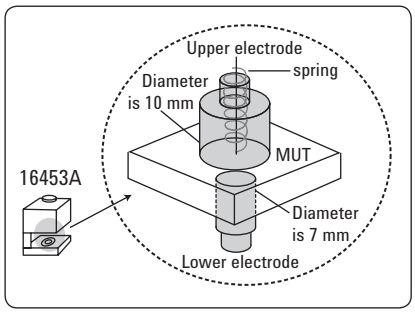

Figure 18. Structure of the 16453A

2.5.4. Principal specifications

Table 8. Principal specifications of the 16453A

Frequency	1 MHz to 1 GHz
Max. voltage	±42 V
Operating temperature	-55 °C to +150 °C*
Terminal configuration	7 mm
Compensation	Open, short and load

* Must be accompanied by the E4991A with Options E4991A-002 and E4991A-007.

The principal specifications are shown in Table 8. Figures 19 and 20 show the measurement accuracy when the E4991A is used. Further details about the measurement accuracy can be obtained from the operation manual supplied with the instrument.

2.5.5. Operation method

Figure 21 displays the flowchart when using the 16453A and E4991A for permittivity measurements. The steps in the flowchart are described here. For further details, please refer to the *Quick Start Guide for the E4991A*.

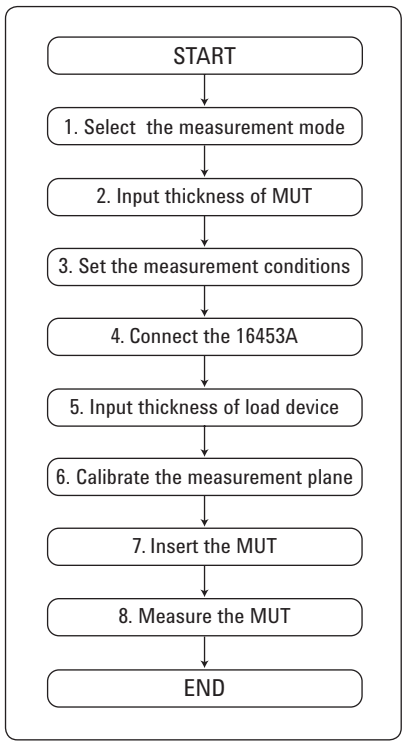

Figure 21. Measurement procedure flowchart for the 16453A

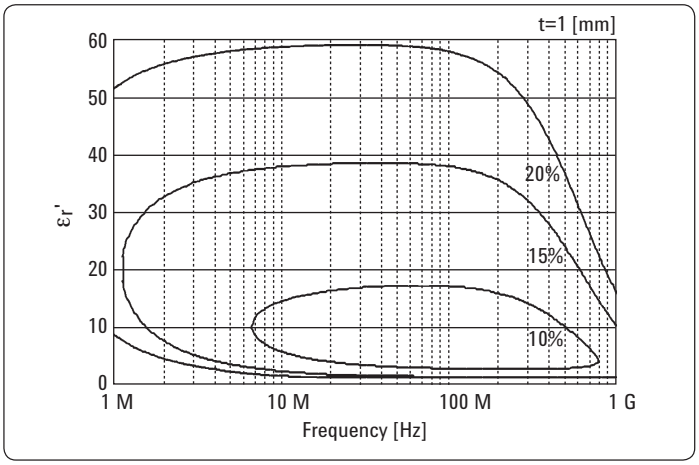

Figure 19. Permittivity measurement accuracy (supplemental data)

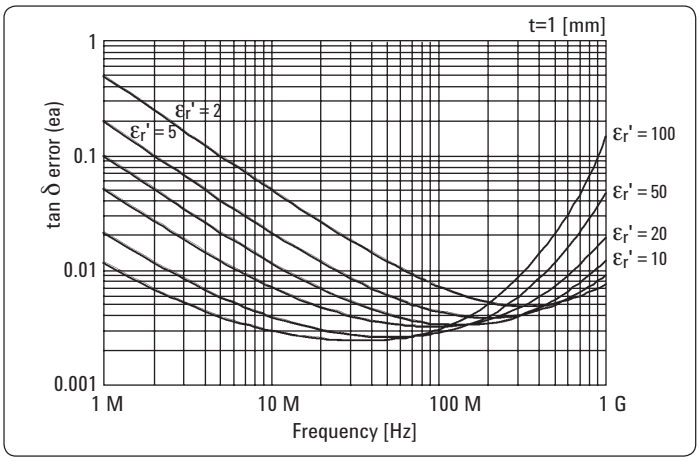

Figure 20. Loss tangent measurement accuracy (supplemental data)

Step 1. Select the measurement mode: Select permittivity measurement in E4991A's utility menu.

Step 2. Input the thickness of MUT: Enter the thickness of the MUT into the E4991A. Use a micrometer to measure the thickness.

Step 3. Set the measurement conditions of the E4991A: Measurement conditions such as frequency, test voltage level, and measurement parameter are set on the measurement instrument.

Step 4. Connect the 16453A: Connect the 16453A to the 7 mm terminal of the E4991A.

Step 5. Input the thickness of load device: Before compensation, enter the furnished load device's (PTFE board) thickness into the E4991A

Step 6. Calibrate the measurement plane: Perform open, short, and load calibration.

Step 7. Insert MUT: Insert the MUT between the electrodes.

Step 8. Measure the MUT: The measurement result will appear on the display. The data can be analyzed using the marker functions.

2.5.6 Special considerations

As with the previous measurement system, an airgap, which is formed between the MUT and the electrodes, can be a primary cause of measurement error. Thin materials and high k materials are most prone to this effect. Materials with rough surfaces (Figure 22) can be similarly affected by airgap.

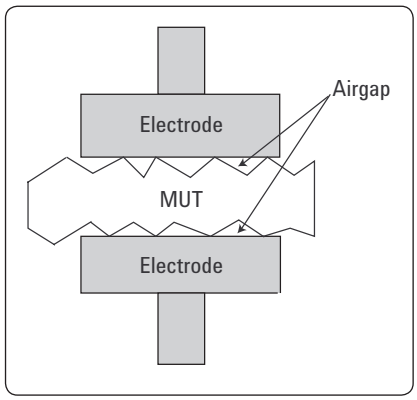

Figure 22. Rough-surfaced dielectric material

There is a technique to apply a thin film electrode onto the surfaces of the dielectric material in order to eliminate the airgap that occurs between the MUT and the electrodes. This technique is shown in Figure 23 and 24. An electrode the exact shape and size to fit the 16453A is fabricated onto the dielectric material using either high-conductivity silver pastes or fired-on silver. The MUT should be shaped as in Figure 23, with the thin film electrode thinner than the dielectric material. In this case, it is vital to appropriately position the fabricated thin film electrode onto the MUT, to precisely contact the electrodes of the 16453A (Figure 24). Following this process will ensure a more accurate and reliable measurement.

In addition, if the MUTs are very thin, for example close to 100 μm, it is possible to stack 3 or 4 other MUTs and then make the measurement. This will reduce the airgap and increase measurement precision. The MUT must be smooth and not transform under applied pressure.

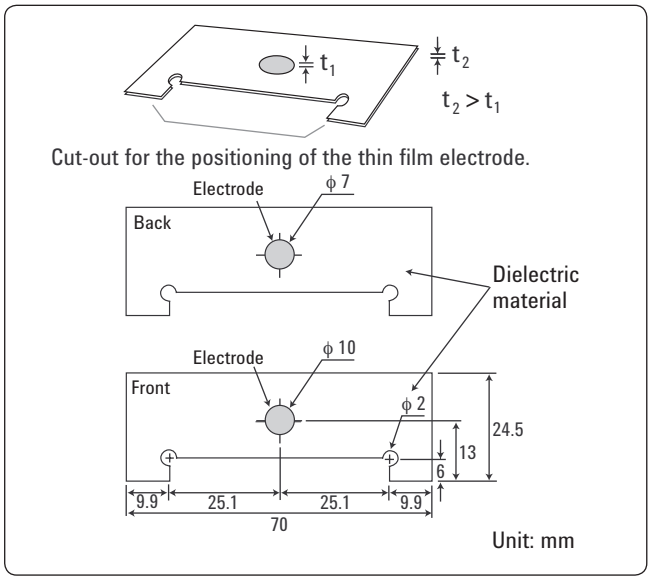

Figure 23. Fabricated thin film electrode's size

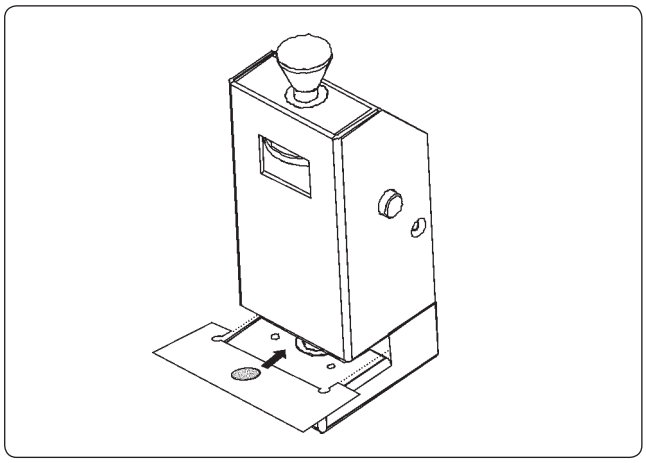

Figure 24. Positioning of the fabricated thin film on the MUT

Another point to consider is the adjusting mechanism of the upper electrode's spring pressure. The spring's pressure should be as strong as possible in order to minimize the occurrence of the airgap between the MUT and the electrodes. However, MUTs which transform under extreme pressure, cannot be measured correctly, since the thickness is affected. To achieve stable measurements, the spring pressure should be set at a level that does not transform the MUT.

2.5.7. Sample measurements

As shown in Figure 25, a measurement result for BT resin frequency characteristic can be obtained by using the E4991A with the 16453A.

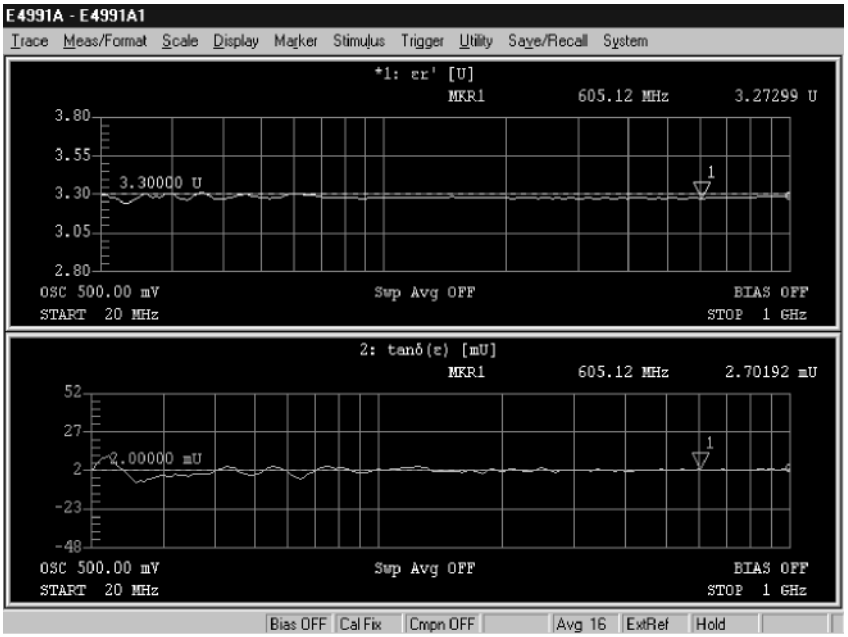

Figure 25. Frequency response of BT resin

3. Permeability Evaluation

3.1. Definition of permeability

Permeability describes the interaction of a material with a magnetic field. It is the ratio of induction, B, to the applied magnetizing field, H. Complex relative permeability (μr^*) consists of the real part ($\mu r'$) that represents the energy storage term and the imaginary part ($\mu r''$) that represents the power dissipation term. It is also the complex permeability (μ^*) relative to the permeability of free space (μ_0) as shown in Figure 26.

The inefficiency of magnetic material is expressed using the loss tangent, tan δ. The tan δ is the ratio of ($\mu r''$) to ($\mu r'$). The term "complex relative permeability" is simply called "permeability" in technical literature. In this application note, the term permeability will be used to refer to complex relative permeability.

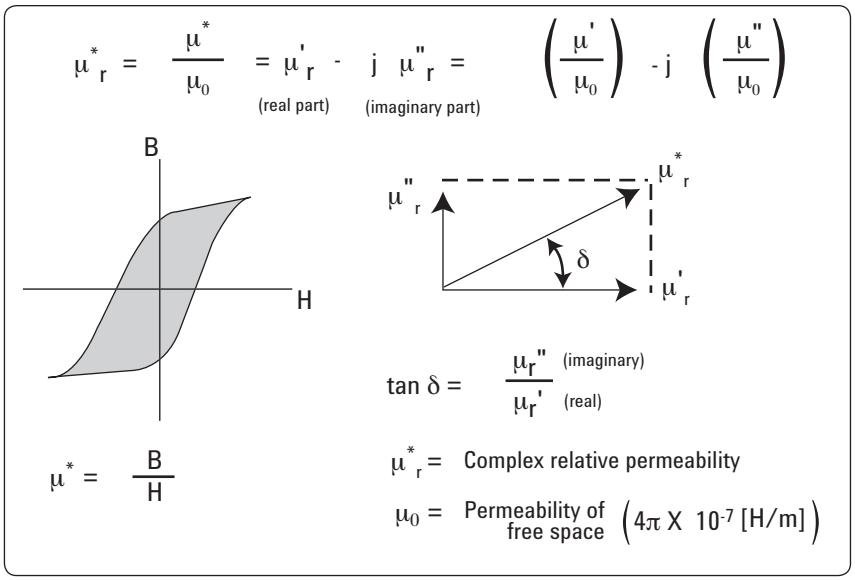

Figure 26. Definition of complex permeability (m*)

3.2. Inductance measurement method

Relative permeability of magnetic material derived from the self-inductance of a cored inductor that has a closed loop (such as the toroidal core) is often called effective permeability. The conventional method of measuring effective permeability is to wind some wire around the core and evaluate the inductance with respect to the ends of the wire. This type of measurement is usually performed with an impedance measuring instrument. Effective permeability is derived from the inductance measurement result using the following equations:

$$\mu_e' = \frac{\ell L_{eff}}{\mu_0 N^2 A}$$

$$\mu_e'' = \frac{\ell (R_{eff} - R_w)}{\mu_0 N^2 \omega A}$$

R_{eff}: Equivalent resistance of magnetic core loss including wire resistance
L_{eff}: Inductance of toroidal coil
R_w: Resistance of wire only
L_w: Inductance of air-core coil inductance
N: Turns
ℓ: Average magnetic path length of toroidal core [m]
A: Cross-sectional area of toroidal core [m²]
ω: 2π f (frequency)
μ_0: $4\pi \times 10^{-7}$ [H/m]

Depending on the applied magnetic field and where the measurement is located on the hysteresis curve, permeability can be classified in degree categories such as initial or maximum. Initial permeability is the most commonly used parameter among manufacturers because most industrial applications involving magnetic material use low power levels.*

This application note focuses on effective permeability and initial permeability, derived from the inductance measurement method.

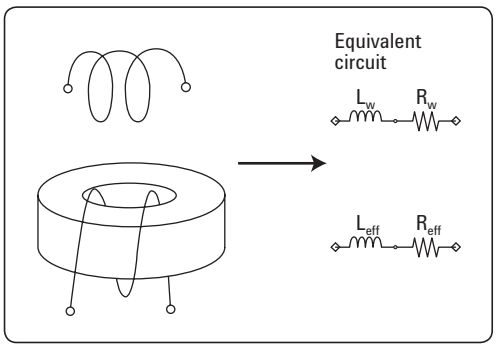

Figure 27. Method of measuring effective permeability

* Some manufacturers use initial permeability even for magnetic materials that are employed at high power levels.

3.3. Permeability measurement system

The next section demonstrates a permeability measurement system using the 16454A magnetic material test fixture.

3.4. Measurement system using the 16454A magnetic material test fixture

3.4.1. Main advantages

- Wide frequency range from 1 kHz to 1 GHz
- Simple measurements without needing a wire wound around the toroid
- Two fixture assemblies are provided for different MUT sizes
- Direct readouts of complex permeability are possible with the E4991A (Option E4991A-002 material measurement software) or with the 4294A (IBASIC program).

* For temperature-response evaluations, Option E4991A-007 is required. A heat-resistant cable, that maintains high accuracy and a program for chamber control and data analysis, are included with Option E4991A-007. The 4294A does not have a high temperature test head.

Applicable instruments: E4991A (Option E4991A-002)*, 4294A, and 42942A

- Temperature characteristic measurements are possible from –55 °C to +150 °C (with the E4991A Options E4991A-002 and E4991A-007)

3.4.2. Applicable MUT

The applicable magnetic material can only be a toroidal core. The applicable MUT size is shown in Figure 28.

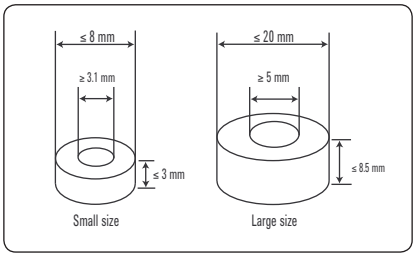

Figure 28. Applicable MUT size

3.4.3. Structure

The structure of the 16454A and the measurement concept are shown in Figure 29. When a toroidal core is inserted into the 16454A, an ideal, single-turn inductor, with no flux leakage, is formed. Permeability is derived from the inductance of the toroidal core with the fixture.

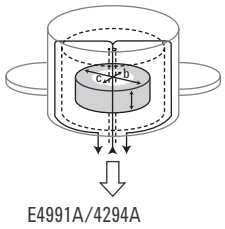

$$\dot{\mu} = \frac{(\dot{Z}m - \dot{Z}sm)\ 2\pi}{j\omega\mu 0 \quad h\ ln\ \frac{c}{b}} + 1$$

$\dot{\mu}$	Relative permeability
$\dot{Z}m$	Measured impedance with toroidal core
$\dot{Z}sm$	Measured impedance without toroidal core
μ_0	Permeability of free space
h	Height of MUT (material under test)
c	Outer diameter of MUT
b	Inner diameter of MUT

Figure 29. Structure of the 16454A and measurement concept

3.4.4. Principal specifications

Table 9. Principal specifications of the 16454A

Frequency	1 kHz to 1 GHz
Max dc bias current	±500 mA
Operating temperature	-55 °C to +150 °C
Terminal configuration	7 mm
Compensation	Short

Principal specifications of the 16454A are shown in Table 9 above. Figures 30 and 31 show the measurement accuracy when either the E4991A or the 4294A are used.

3.4.5. Operation method

Figure 32 displays the flowchart when using the 16454A for permeability measurements. Each step of the flowchart is described here:

Step 1. Calibrate the measurement instrument: When using the E4991A, calibrate at the 7 mm terminal. When using the 4294A, perform SETUP on the 7 mm terminal of the 42942A.

Step 2. Connect the 16454A: Connect the 16454A to the measurement instrument's 7 mm terminal. When using the E4991A, select the permeability measurement mode.

Step 3. Compensate the residual impedance of the 16454A: Insert only the MUT holder and perform short compensation.

Step 4. Input size of MUT: Enter the size of the MUT into the measurement instrument's menu. Use a micrometer to measure the size.

Step 5. Insert MUT: Insert the MUT with the holder into the 16454A.

Step 6. Set the measurement conditions: Measurement conditions such as frequency, test signal level, and measurement parameter are set on the measurement instrument.

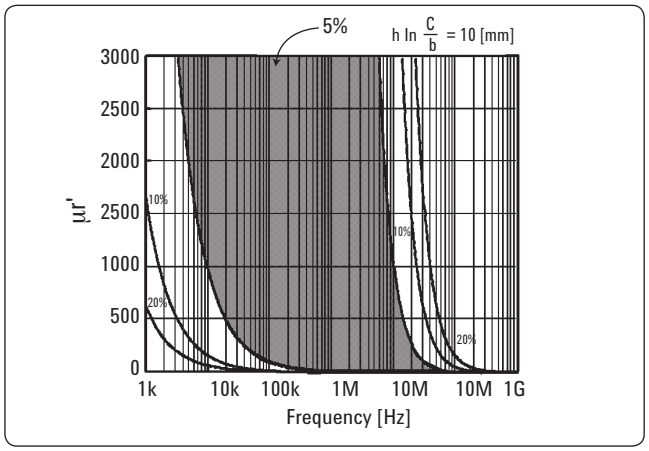

Figure 30. Permeability measurement accuracy (supplemental data)

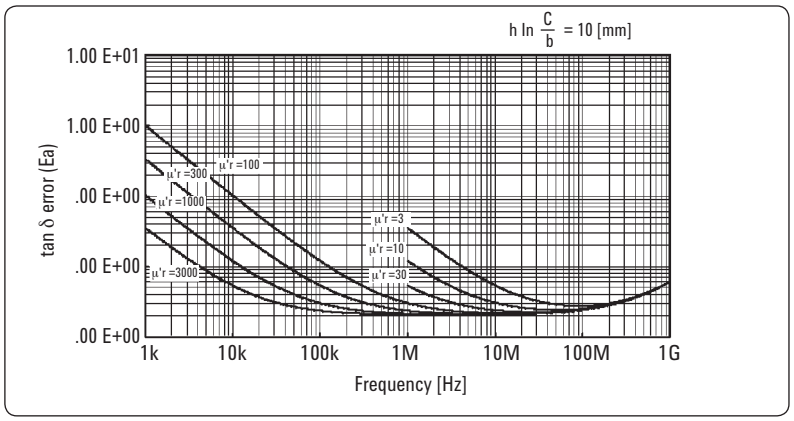

Figure 31. Loss tangent measurement accuracy (supplemental data)

Step 7. Measure the MUT: The measurement result will appear on the display. The data can be analyzed using the marker functions.

When using the 4294A with the 16454A, a sample IBASIC program, which follows the steps described above, is provided. The sample program is furnished on a floppy disk with the operation manual of the 4294A. Internal firmware comes standard with the material measurement function when using the E4991A (Option E4991A-002). For more details, refer to the *Operation Manual of the E4991A*.

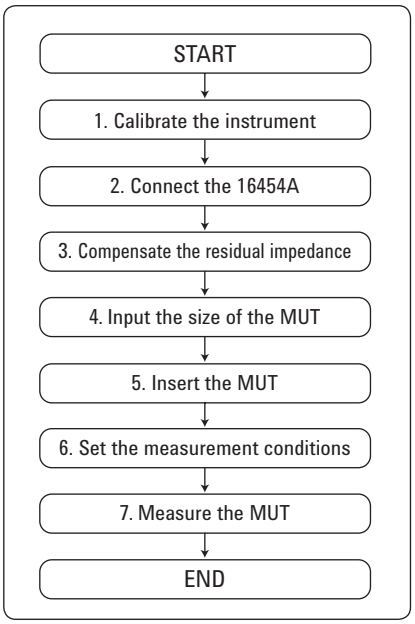

Figure 32. Measurement procedure flowchart for the 16454A

3.4.6. Special considerations

When measuring a magnetic material with a high permittivity (near 10 or above), precise measurements cannot be performed near 1 GHz. Permeability is derived from the inductance value of the combined impedance of the MUT and the fixture. The measured impedance should be composed of inductance and a negligible amount of capacitance. When the magnetic material's permittivity is high, current flows through the space between the MUT and the fixture. This is equivalent to a capacitor connected in parallel to the inductor (of the MUT). This parallel LC circuit causes an impedance-resonance at a destined frequency. The higher the permittivity, the lower the resonant frequency will be and precise measurements will be difficult.

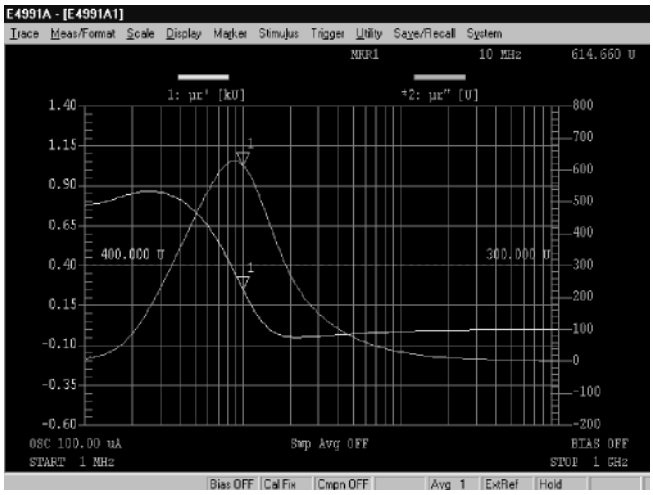

Figure 33. Frequency response of MnZn ferrite core

3.4.7. Sample measurements

Frequency characteristic measurement results of the MnZn ferrite core are shown in Figure 33. The E4991A and the 16454A were used to obtain the results in Figure 33.

The low frequency response of MnZn ferrite core was measured using the 4294A and the 16454A and the results are shown in Figure 34.

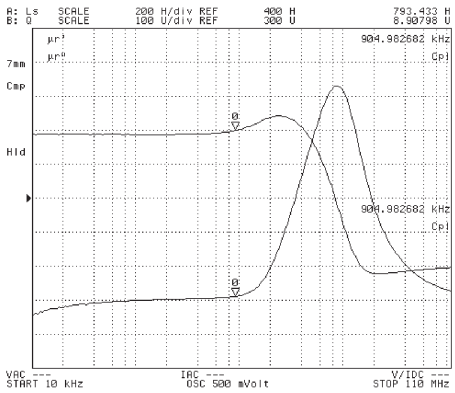

4294A settings:
- Osc. level: 500 mV
- Frequency: 10 kHz to 110 MHz
- Parameters: μ_r' vs. μ_r'
- BW: 5

16454A settings:
- Electrode: large type

Figure 34. Low frequency response of MnZn ferrite core

4. Conclusion

In this application note, permittivity and permeability measurement methods using impedance measurement technology were discussed.

The discussions covered various test fixtures' structures, applicable MUT sizes, operation methods and special considerations. By using this application note as a reference, a measurement solution that satisfies measurement needs and conditions can be selected easily.

Appendix

A. Permittivity Evaluation of Liquids

Permittivity measurements are often used for evaluation of liquid characteristics. Permittivity measurements do not change the liquid physically and can be conducted rather simply and quickly. As a result, they are utilized in a wide array of research areas. Here, the 16452A liquid test fixture, which employs the parallel plate method, will be discussed as a permittivity measurement system for liquids.

A.1. Measurement system using the 16452A liquid test fixture

A.1.1. Main advantages

- Wide frequency range from 20 Hz to 30 MHz
- Plastic resins, oil-based chemical products and more can be measured
- Measurement is possible with a small volume of test liquid so MUT is not wasted
- Temperature characteristic measurements are possible from –20 °C to +125 °C
- Can be used with any impedance measuring instrument that has a 4-terminal configuration.

A.1.2. Applicable MUT

The sample liquid capacity is dependent upon which spacer is used. The spacer adjusts the gap between the electrodes and causes the air capacitance to be altered as well. Table 13 lists the available spacers and the corresponding sample liquid capacities.

A.1.3. Structure

The structure of the 16452A is shown in Figure 40. Three liquid inlets simplify pouring and draining and the fixture can be easily disassembled so that the electrodes can

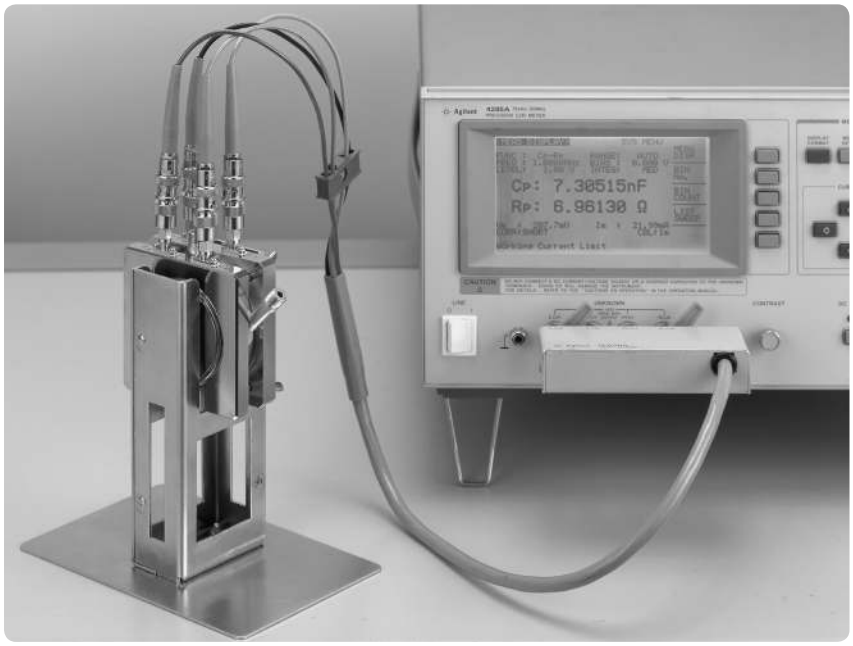

Applicable instruments: 4294A, 4284A, and E4980A

Table 13. Relationship between spacers and liquid capacity

Sample liquid capacity	3.4 ml	3.8 ml	4.8 ml	6.8 ml
Air capacitance (no liquid present)	34.9 pF ±25%	21.2 pF ±15%	10.9 pF ±10%	5.5 pF ±10%
Spacer thickness	1.3 mm	1.5 mm	2 mm	3 mm

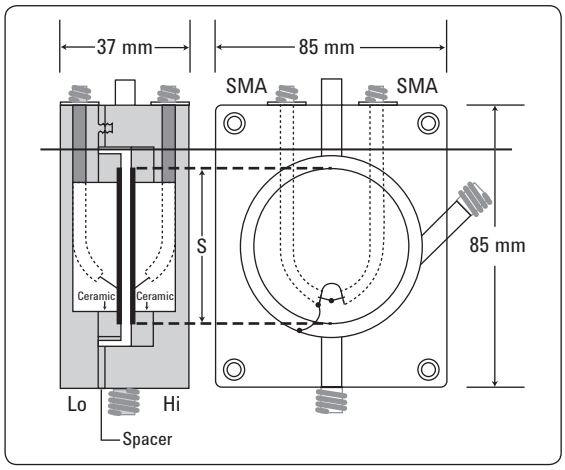

Figure 40. Structure of the 16452A

A 1 m cable is required for connecting to the measurement instrument. Appropriate cables are listed in Table 14.

Table 14. 1 m cables for the 16452A

Temperature	**Part number**
0 °C to 55 °C	16048A
-20 °C to 125 °C	16452-61601
-20 °C to 125 °C	16048G (4294A only)

A.1.4. Principal specifications

Table 15. Principal specifications of the 16452A

Frequency	20 Hz to 30 MHz
Max voltage	± 42 V
Operating temperatures	-20 °C to 125 °C
Terminal configuration	4-terminal pair, SMA
Compensation	Short

The principal specifications of the 16452A are shown in Table 15 and the measurement error is calculated using the following equation.

Measurement accuracy = A + B + C [%]

Error A: see Table 16
Error B: when $\varepsilon_r' = 1$; see Figure 41
Error C: error of measurement instrument

Table 16. Error A

Spacer thickness (mm)	B (%)
1.3	0.005 x MRP
1.5	0.006 x MRP
2.0	0.008 x MRP
3.0	0.020 x MRP

M.R.P is measurement relative permittivity

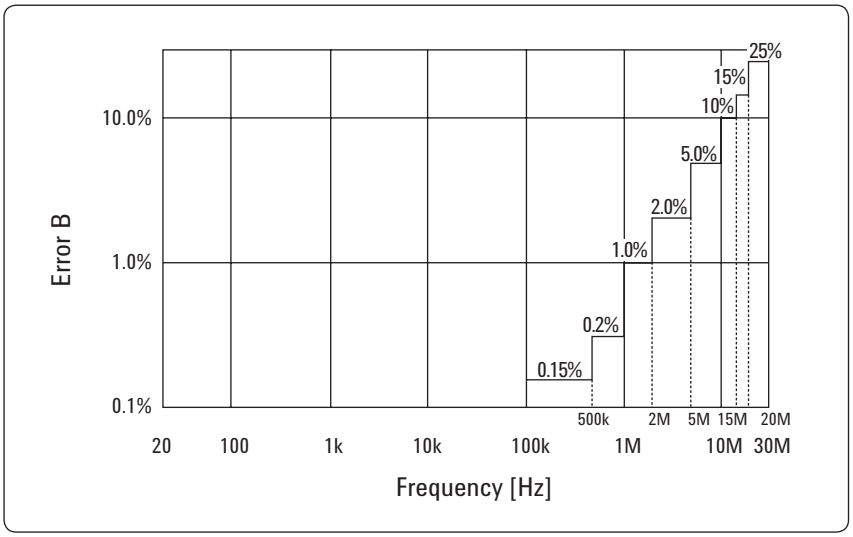

Figure 41. Relative measurement accuracy (supplemental data)

A.1.5. Operation method

Figure 42 displays the flowchart when using the 16452A for permittivity measurements of liquids. Each step of the flowchart is described here:

Step 1. Assemble the 16452A and insert the shorting plate: While attaching the high and low electrodes, insert the shorting plate between them. Next, prepare the 16452A for measurement by connecting the SMA-BNC adapters to the terminals of the fixture and putting the lid on the liquid outlet.

Step 2. Connect the 16452A to the measurement instrument: Select the appropriate 1 m cable depending on the operating temperature and the measurement instrument. Connect the 16452A to the UNKNOWN terminals of the measurement instrument.

Step 3. Compensate the cable length: Set the measurement instrument's cable length compensation function to 1 m. Refer to the measurement instrument's operation manual for the setting procedure.

Step 4. Check the short residual of the 16452A: To verify whether the 16452A was assembled properly, measure the shorting plate at 1 MHz and check if the value falls within the prescribed range. Perform this verification before short compensation. For further details, refer to the *Operation Manual* provided with the 16452A.

Step 5. Set the measurement conditions: Measurement conditions such as frequency and test voltage level are set on the measurement instrument. The measurement parameter should be set to Cp-Rp. Refer to the measurement instrument's operation manual for the setting procedure.

Step 6. Perform short compensation: Perform short compensation with the shorting plate inserted between the electrodes.

Step 7. Measure the air capacitance: Remove the shorting plate, and insert the appropriate spacer required for the sample liquid volume. The air capacitance that exists between the electrodes is measured with the parameter Cp-Rp.

Step 8. Pour liquid in: Pour the liquid into the inlet of the fixture.

Step 9. Measure liquid: Perform a Cp-Rp measurement with the liquid in the fixture.

Step 10. Calculate permittivity: Permittivity and loss factor is calculated using the following equations:

$$\varepsilon_r' = \frac{C_p}{C_0} \qquad \varepsilon_r'' = \frac{1}{\omega C_0 R_p}$$

C_p: Equivalent parallel capacitance of MUT [F]
C_0: Equivalent parallel capacitance of air [F]
R_p: Equivalent parallel resistance of MUT [Ω]
ω: $2\pi f$ (frequency)

Step 11. Drain liquid out: Drain the liquid out from the outlet of the fixture.

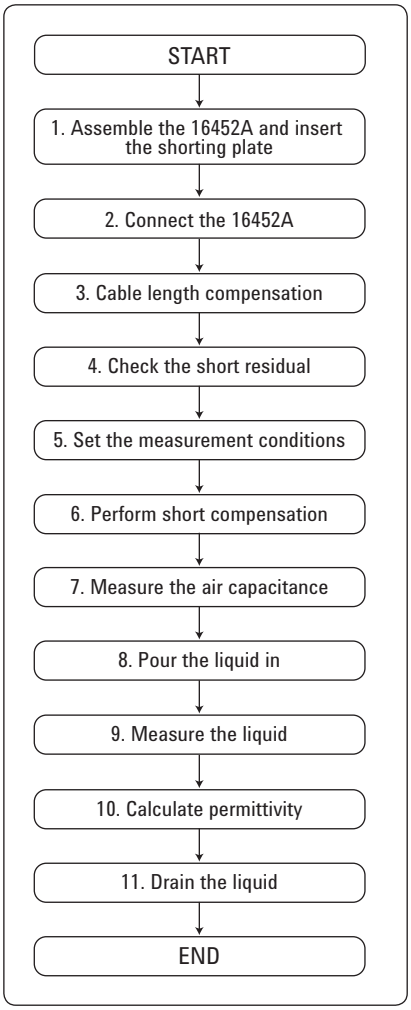

Figure 42. Measurement procedure flowchart for the 16452A

A.1.6. Special considerations

There is a high possibility that liquids with bulk conductivity such as salt (Na+ Cl-) or ionic solutions cannot be measured. This is due to the electrode polarization phenomenon, which causes incorrect capacitance measurements to occur for these types of liquids. Even for low frequency measurements of liquids that do not have bulk conductivity, such as water, there is a high possibility that electrode polarization will occur.

References

1. ASTM, "*Test methods for A-C loss characteristics and permittivity (dielectric constant) of solid electrical insulating materials*," ASTM Standard D 150, American Society for Testing and Materials

2. ASTM, "*Test methods for D-C resistance or conductance of insulating materials*," ASTM Standard D 257, American Society for Testing and Materials

3. *Application Note 1297, "Solutions for measuring permittivity and permeability,"* Agilent literature number 5965-9430E

4. *Application Note 380-1, "Dielectric constant measurement of solid materials using the 16451B dielectric test fixture,"* Agilent literature number 5950-2390

5. *Accessories Selection Guide for Impedance Measurements,* Agilent literature number 5965-4792E

6. *Agilent 16451B Operation and Service Manual,* PN 16451-90020

7. *Agilent 16452A Operation and Service Manual,* PN 16452-90000

8. *Agilent 16454A Operation and Service Manual,* PN 16454-90020

Web resources

Please visit our website at:
www.agilent.com/find/impedance
for more information about impedance test solutions,
www.agilent.com/find/lcrmeters
for more information about lcr meters.

For more information about material analysis visit:
www.agilent.com/find/materials

Three-Year Warranty

www.agilent.com/find/ThreeYearWarranty
Agilent's combination of product reliability and three-year warranty coverage is another way we help you achieve your business goals: increased confidence in uptime, reduced cost of ownership and greater convenience.

Agilent Advantage Services

www.agilent.com/find/AdvantageServices
Accurate measurements throughout the life of your instruments.

www.agilent.com/quality

myAgilent

www.agilent.com/find/myagilent
A personalized view into the information most relevant to you.

www.lxistandard.org
LAN eXtensions for Instruments puts the power of Ethernet and the Web inside your test systems. Agilent is a founding member of the LXI consortium.

Agilent Channel Partners

www.agilent.com/find/channelpartners
Get the best of both worlds: Agilent's measurement expertise and product breadth, combined with channel partner convenience.

www.agilent.com

For more information on Agilent Technologies' products, applications or services, please contact your local Agilent office. The complete list is available at:
www.agilent.com/find/contactus

Americas

Canada	(877) 894 4414
Brazil	(11) 4197 3600
Mexico	01800 5064 800
United States	(800) 829 4444

Asia Pacific

Australia	1 800 629 485
China	800 810 0189
Hong Kong	800 938 693
India	1 800 112 929
Japan	0120 (421) 345
Korea	080 769 0800
Malaysia	1 800 888 848
Singapore	1 800 375 8100
Taiwan	0800 047 866
Other AP Countries	(65) 375 8100

Europe & Middle East

Belgium	32 (0) 2 404 93 40
Denmark	45 45 80 12 15
Finland	358 (0) 10 855 2100
France	0825 010 700*
	*0.125 €/minute
Germany	49 (0) 7031 464 6333
Ireland	1890 924 204
Israel	972-3-9288-504/544
Italy	39 02 92 60 8484
Netherlands	31 (0) 20 547 2111
Spain	34 (91) 631 3300
Sweden	0200-88 22 55
United Kingdom	44 (0) 118 927 6201

For other unlisted countries:
www.agilent.com/find/contactus
(BP-3-1-13)

Product specifications and descriptions in this document subject to change without notice.

© Agilent Technologies, Inc. 2013

Published in USA, September 27, 2013
5980-2862EN

Agilent Technologies