Variable Optical Attenuator in BER Test Applications

Application Note

This application note will help users of optical attenuators to understand the key features of Agilent's new attenuator family. As an example a typical receiver (Rx) test in Bit Error Rate (BER) testing is described. The operation of the attenuator in the optical path is described, rather than BER testing as such. Only single mode fiber applications are considered.

Agilent Technologies

Introduction

Agilent's 81566A and 81567A optical attenuators feature a power control functionality that allows the output power level to be set directly. This document describes how these modules are used in BER test applications, such as a typical receiver (Rx) test.

[Agilent's 81560A and 81561A are pure attenuator modules. All calibration features are as described here, but there is no power monitoring. All active power control features are applicable only to 81566A and 81567A.]

The attenuator module firmware uses the feedback signal of a photo diode after a monitor coupler, both integrated in the module, to set the desired power level at the output of the module. When the power control mode is enabled, the module automatically corrects power changes at the input to maintain the output level set by the user.

Since there is an inherent uncertainty at connector interfaces, calibration is required. The power levels set by the Agilent 81566A and 81567A refer to the output power level measured at this calibration with an external powermeter. A comprehensive offset functionality in the firmware enhances the necessary calibration processes.

BER testing has general application. During the advanced phases of production, devices are tested using related tests, such as the SONET/SDH test. SONET/SDH Testers contain a BERT, but the data source adds SONET/SDH data frames to the data generated by a PRBS generator. However, the set-up is essentially the same. Typical transmission rates are 2.5Gb/s (OC-48), 10Gb/s (OC-192), and 40Gb/s (OC-768).

Applications of optical attenuator Attenuators are used with powermeters to control the optical power level in an optical transmission path. Typically, a coupler after the attenuator separates some optical power from the fiber to be monitored by a powermeter. After an initial calibration process (of the attenuator, coupler, patchcords and connectors in the test setup), the output power is known by measuring the power at the monitor tap. Traditionally, a computer-based test set-up queries the powermeter for a value, sends an appropriate command to the attenuator, then queries the powermeter again, until the actual power level is within a specified tolerance of the desired power level. Agilent's 81566A and 81567A have implemented exactly this power setting feature in one module.

One essential parameter for BER tests is the optical power at the device under test (DUT). The BER of the DUT is typically specified for, and therefore tested against, the optical input power. A DUT can be a receiver (Rx) or transceivers/transponders (RxTx). Such devices are tested at several stages in their manufacturing chain: as components, as modules, and so on, up to final products such as line cards.

Optical attenuators are also used with Digital Communication Analysers (DCAs) in several tests such as transmitter (Tx) and transceiver (RxTx) tests to determine the optical link power budget using eye compliance testing. The optical signal is attenuated until the eye opening violates the defined eye masks regions for specific standards, such as the GigaBit Ethernet standard or any SONET/SDH standard. Time domain parameters (such as Jitter, Rise and Fall Time) have to be measured at defined input power levels that can be set using optical attenuators. This avoids overdriving the DCA's optical input stage, which distorts the electrical signal and introduces inaccuracies into the analysis.

The operation of the attenuator is described using a BER Test set-up. However the attenuator can also be used in applications such as those mentioned above.

Operation

The operations described in this section can, in general, be performed either via the user interface, or via computer controlled GPIB commands.

The attenuator can be used in two ways. The user can specify either an attenuation factor, or an output power level.

1. When an attenuation factor is entered, the attenuator changes the link loss to the given value. The output power reading adapts to this new setting automatically. This operation could be used in eye compliance testing or for evaluating other time domain parameters. To gain more accuracy refer to the section "Tips and Tricks".

2a. When an output power level is entered, the attenuation factor is changed until the appropriate power level is applied to the DUT. This is possible because the attenuator contains an internal powermeter. The attenuator can also store the sum of the intrinsic, extrinsic, and wavelength dependent losses of the optical path and apply them automatically. This operation could be used for BER Test measurements as well as other time domain parameter measurements.

As the attenuation factor is changed to correspond to the new power, the attenuation reading is updated. Absolute values are only possible if the attenuator has been calibrated within the optical path of the test set-up. Refer to "How to calibrate to compensate for unknown loss X". After settling to the selected power level, the attenuator's output power follows changes to the input power of the attenuator.

2b. An advanced operating mode is the power control mode. In power control mode, the output power is continuously monitored by the integrated powermeter, compared with the set power level, and adjusted accordingly. The attenuation factor is adjusted to compensate for variations in input power, that is any change in the output power generated by the source, or different optical switch paths and switch repeatability.

More specific details about the power mode and the control functionality are discussed in the section "How to use the attenuator with integrated power control".

For calibration purposes there are three different types of offsets:

1. α_{Offset} is used to offset the attenuation factor, so allowing a change to the link attenuation to be referenced to a particular attenuation value. The Dsp→Off function sets the α_{Offset} to the negative of the actual attenuation so that the display shows zero attenuation.

2. P_{Offset} is used to offset the set power level against losses due to the patch cords and connectors used between the output of the attenuator and the input of the DUT. The function PM→Off reads the power value of an additional reference powermeter hosted by the same mainframe. The difference between the power value read by the integrated powermeter and this reference powermeter is stored as P_{Offset}.

3. The attenuator is calibrated at the factory to compensate for intrinsic wavelength dependant effects. In addition, extrinsic wavelength dependant effects can be compensated for using the λ_{Offset} feature. Up to 1000 wavelength and offset pairs can be stored in the attenuator's memory. These values are not displayed on the overview screen of the attenuator's user interface, but are retrievable via its menu. The function PM→Off is also applicable for λ_{Offset}.

How to use the attenuator with integrated power control

Provided that the attenuator has been calibrated for the test setup, an output power level to the DUT can be specified directly. The accuracy of this method depends on the accuracy of the powermeter used for calibration. To, for example, eliminate coupling losses, enter the appropriate offset in P_{Offset}.

Entering correction values in an array of up to 1000 λ_{Offset} values can be used to compensate for the wavelength dependent losses of components in the optical path, as discussed previously. Disable the wavelength offset function before entering new offset values. The attenuator uses these values when this function is enabled.

During a test:

- If the operating wavelength matches a wavelength in the array, the exact offset value is used. The status line display shows offset.
- If the operating wavelength is between two offset values the offset value is calculated by linear interpolation. The status line display indicates that the value is interpolated.
- If the operating wavelength is greater than, or less than, the range of offsets stored the closest value is extrapolated. The status line display indicates that the value is extrapolated.

If the power control function is enabled, the set power is controlled against any output power drift by the optical source. As the source's output power decreases, the attenuation factor also decreases to increase transmission within the attenuator. If the attenuation is driven to 0dB, the Excessive Power indicator is displayed, since the input power is too low to be compensated for.

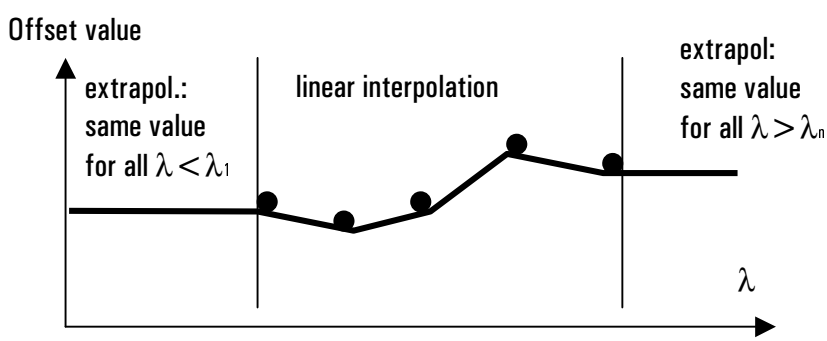

Figure 1 Extrapolation and interpolation of offset values

Typical Set-up for RX Sensitivity Test

Set-up

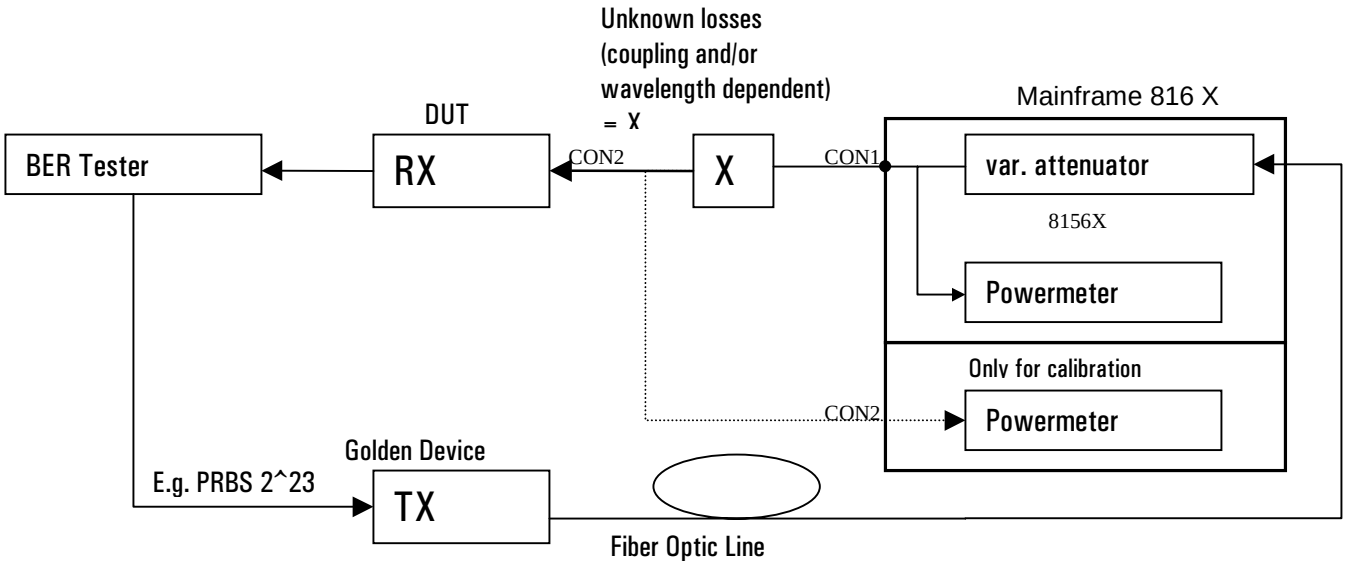

Figure 2 Typical RX Sensitivity test set-up using BERT

Description

A BER Tester generates pseudo random bit sequences. The PRBS data stream is adapted to a fiber optic transmission line by a known/characterized transmitter (e/o). The optical signal is fed into the variable attenuator, which simulates transmission link losses. An output power level is set (taking advantage of the attenuator's integrated powermeter and correction functionality). The DUT itself converts the optical signal into an electrical signal suitable for the BER Tester. The BERT synchronizes and compares the outgoing and incoming data. The attenuation of the link is incremented until the errors exceed a defined threshold level, such as BER 10^{-12}. When this point is reached, the output power applied to the DUT is given by the attenuator's integrated powermeter, since the sensitivity level at the defined BER is the measured power including correction values.
Connector CON2 is plugable between the DUT and the powermeter used for calibration.

However, between the attenuator output and DUT input there are additional unknown losses, caused by the patchcord used, its connectors, and other wavelength dependent components. The sum of these losses is called X in this document.

Example how to compensate unknown loss “X” using Calibration

Set-up for calibration:

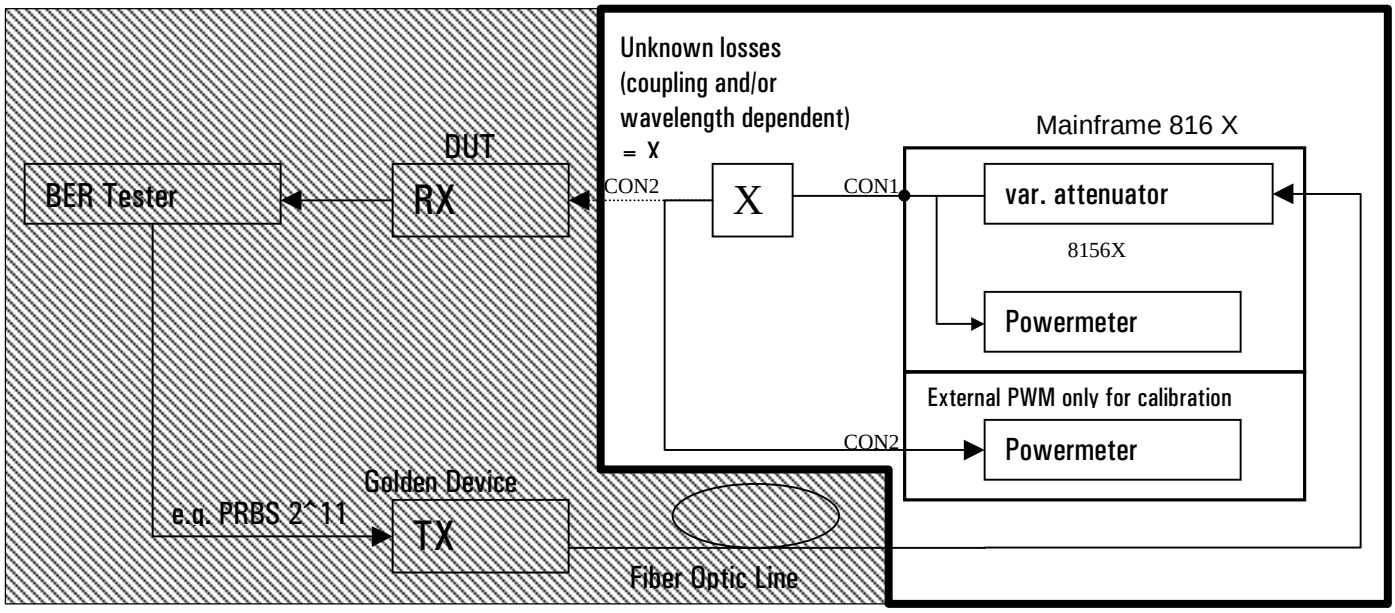

Figure 3 Test set-up during User Calibration versus wavelength

Description of Calibration Test Set-up

The calibration is performed within the BER test set-up.

The focus is now X, which was undefined in the test set-up described previously

Please note that the basic configuration has not changed, excepting that connector CON2 is now plugged into the reference powermeter’s input instead of the DUT (figure 3).

In multi-channel environments (Mainframe 8164A and 8166A) only one reference powermeter is necessary to calibrate all channels.

Structure of the user wavelength calibration processes

The user wavelength calibration process is used to determine offset values for every operation wavelength. These offset values are stored in the non-volatile memory of the attenuator.

There are two possible methods.

1. The first method is applicable when the external reference powermeter is hosted by the same mainframe as the attenuator. Here, the wavelength offset is determined and stored using a softkey command, or via the equivalent GPIB command. In this case, two separate power readings, the calculation of difference between these power values, and entering the result into the attenuator's wavelength offset table located in a flash memory, is done automatically.

   The reference powermeter must be assigned to a pointer, namely the attenuator's internal TOREF variable.

Possible implementation Wavelength Offset Cal Method 1

Takes the needed offset values automatically, and
stores them directly in the attenuator's internal flash memory.
Attenuator AND reference PWM must be hosted by the same mainframe.

Zero powermeters

Initialisation
81566A / 81567A (same averaging time as ref PWM, offset, unit, shutter)
Reference power meter (same averaging time as above, unit)
Load address of reference powermeter to attenuator's internal TOREF variable

For every operation wavelength of TX

Apply operating wavelength to optical path
Set attenuator wavelength
Set powermeter wavelength
Perform internal wavelength offset determination
using user interface softkey or appropriate GPIB command

Figure 4 Possible implementation of Wavelength Offset Cal Method 1

If you wish to do this from a computer program, initialize TOREF using the appropriate GPIB command before determining the internal wavelength offset. These GBIP commands are described in your mainframe's Programming Guide. Otherwise, by utilizing the user interface you are prompted to assign a reference powermeter after selecting this calibration function.

All the powermeters used should be zeroed from time-to-time, to compensate for the offset caused by dark current in the detector diode.

2. The second method is to load the power value measured by the internal powermeter of the attenuator, and by the reference power meter, into the system controller (PC) separately.

The PC calculates the offset as the difference between the power values, then uses the appropriate commands to store the wavelength:offset value pair in the attenuator's memory. This method, referred to as method 2, must be used if the reference powermeter used for calibration is not hosted by the same mainframe as the attenuator.

All the powermeters used should be zeroed from time-to-time, to compensate for the offset caused by dark current in the detector diode.

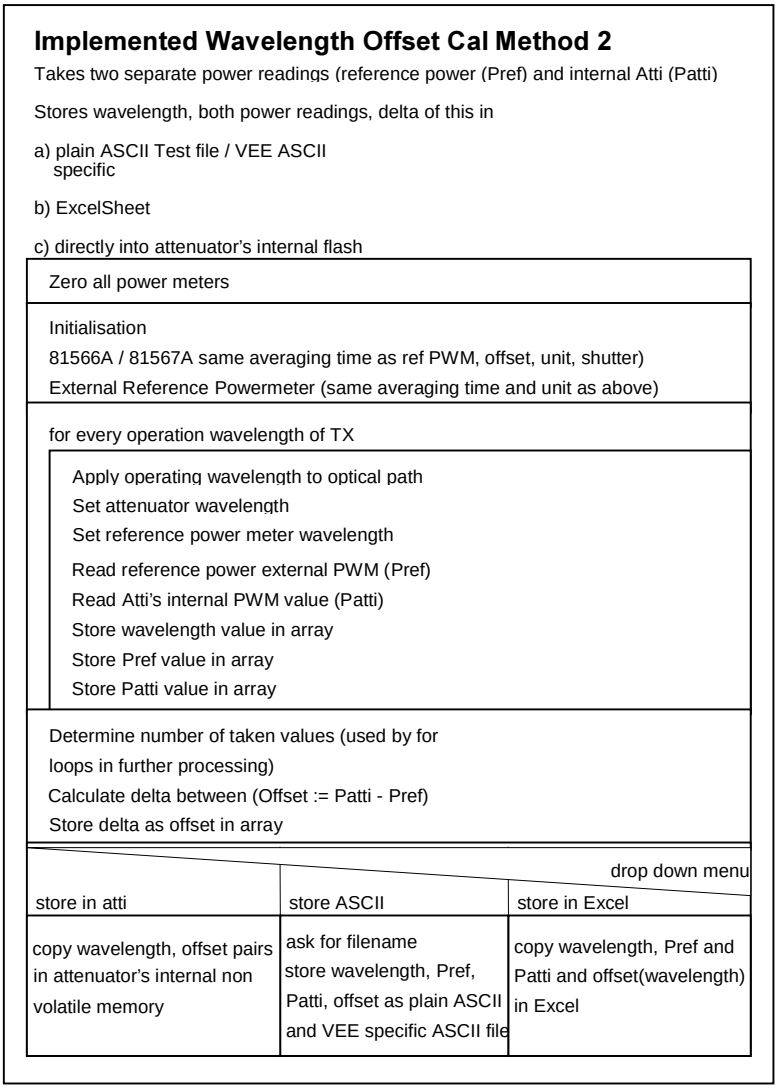

Figure 5 Complete Calibration Structure

Description of program's key elements (method 1)

This section will give a detailed view of the key steps have to be performed to calibrate the attenuator using method 1.

Source Method 1 Part#1 Initialization

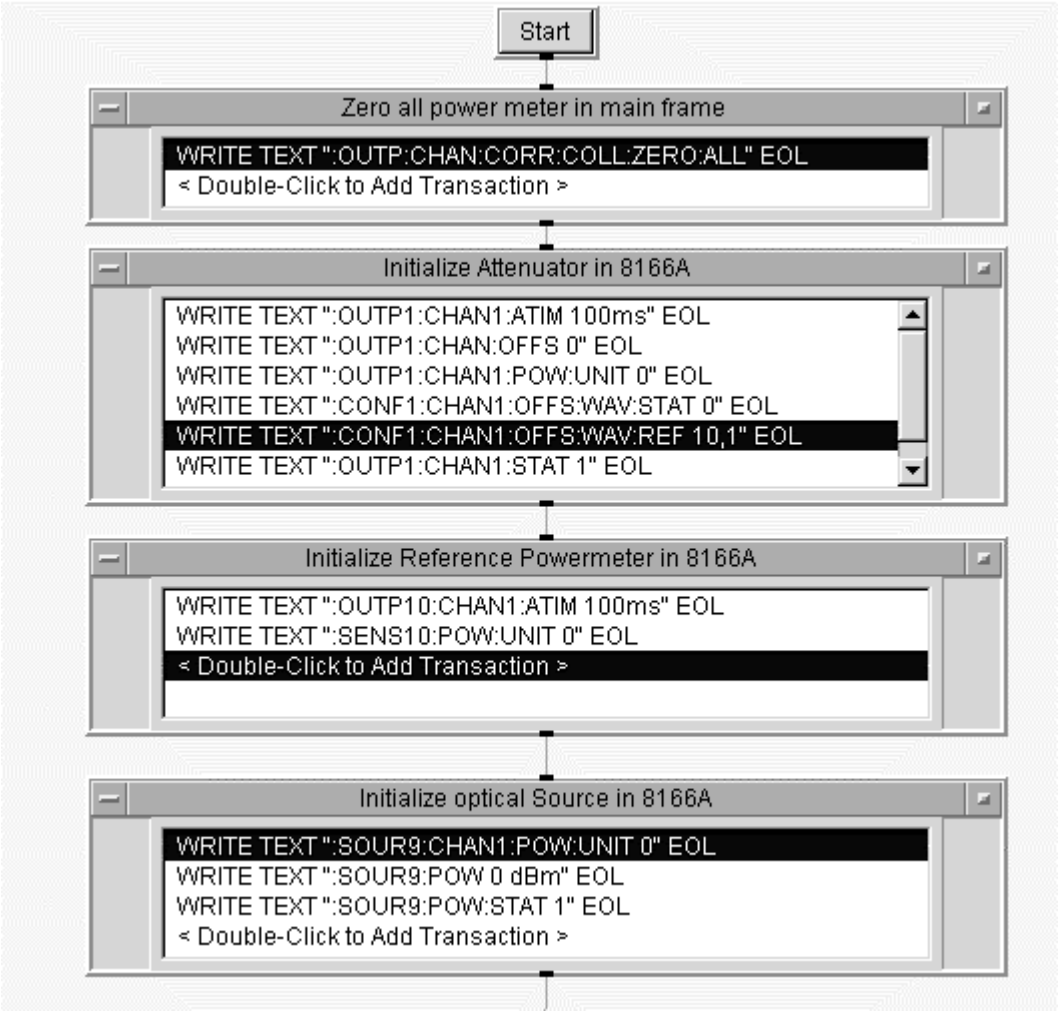

Figure 6 Initialisation of instruments

Source Method1 Part #2 Calibration

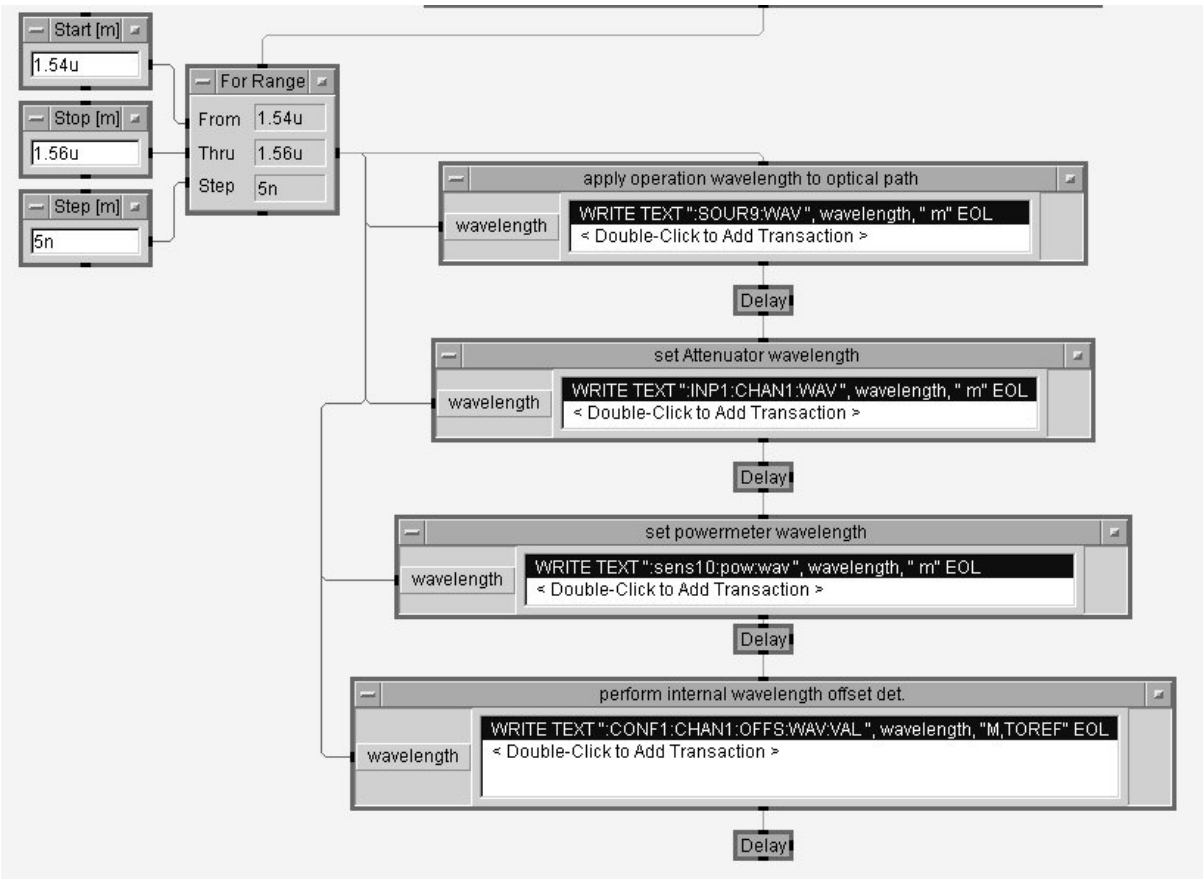

Figure 7 Source of calibration Method 1

Description

A loop is set up that includes every wavelength used (defined by two end-points and a step-size). The attenuation wavelength, and the power meter wavelength, is also set. A built-in function is called to perform the wavelength-offset calibration.

Delays are implemented to avoid polling measurement instruments for 'finishing current command' status. To aid readability, error handling is omitted but should be implemented in real programs.

Description of program's key elements (method 2)

This section will give a detailed view of the key steps for calibrating the attenuator using method 2.

Measuring of Pref and Patti over wavelength

Source

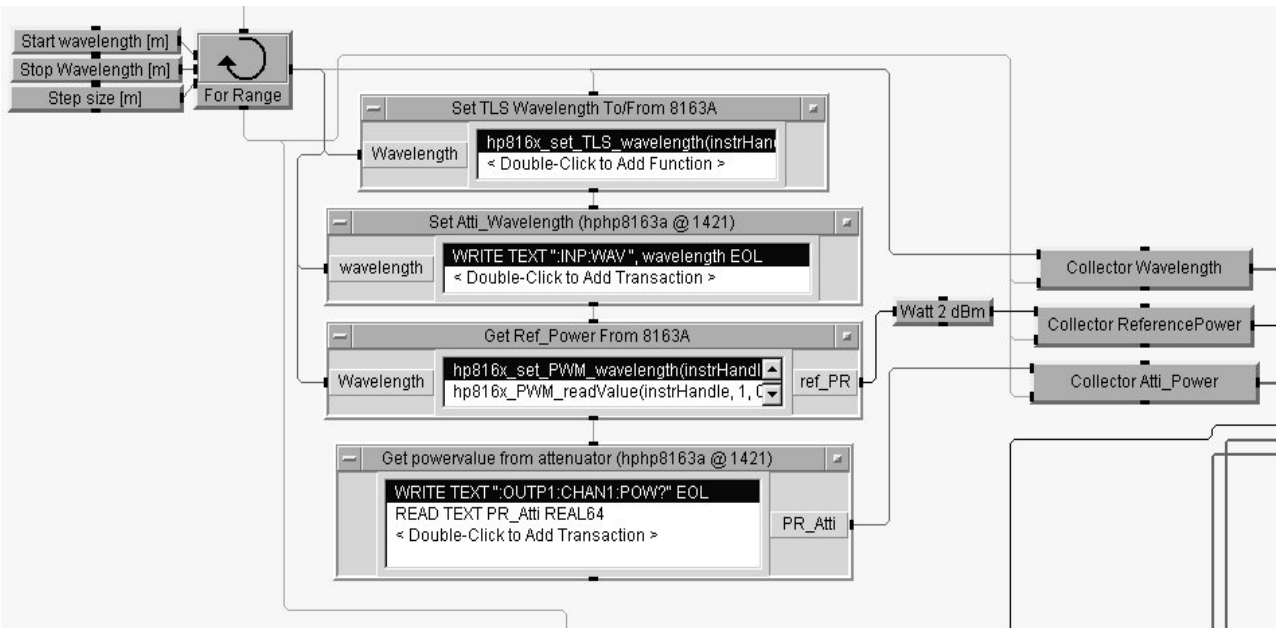

Figure 8 Detailed view of measuring Pref and Patti versus wavelength

Description

To calculate the loss between the attenuator's internally measured power level and the DUT's input power level (later entered as the user cal value), a loop is set up that includes every wavelength used (defined by two end-points and a step-size).

For each wavelength:

- the wavelength itself
- the power measured by the Attenuator's internal powermeter (Patti), and
- the power measured by the reference powermeter (Pref) are stored in arrays for further processing.

To ensure that the values measured are comparable, the averaging time of the reference powermeter must match the averaging time of the attenuator's built in powermeter, and all the powermeters used must have been zeroed properly.

Calculation of needed offset values to be entered in internal memory of attenuator with power control

Source

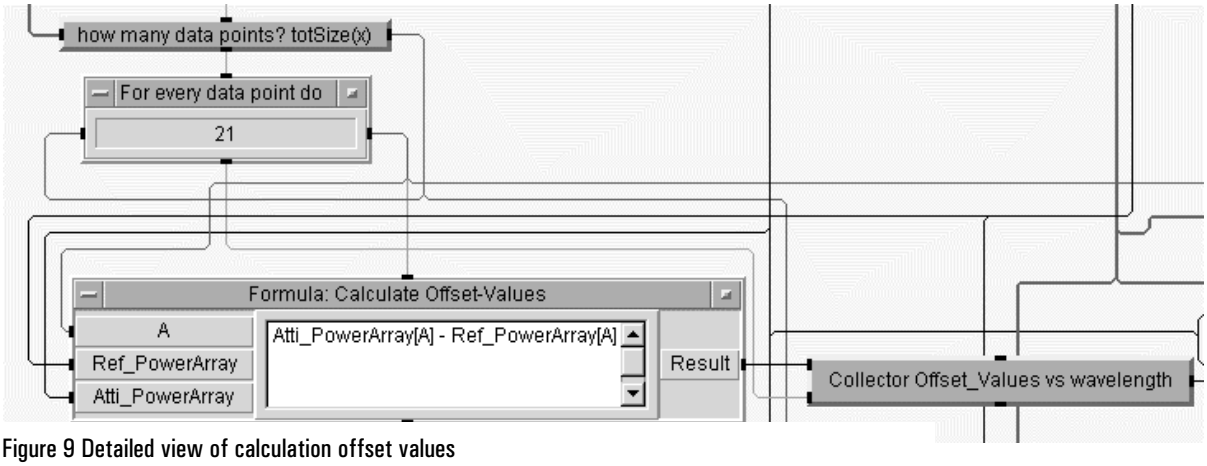

Figure 9 Detailed view of calculation offset values

Description

For each wavelength, the power value measured by the reference powermeter is subtracted from the power value measured by the attenuator's internal powermeter. These offset values are stored in an array.

Storing determined wavelength dependent offset values into the Attenuator's user-programmable offset table-memory

Source

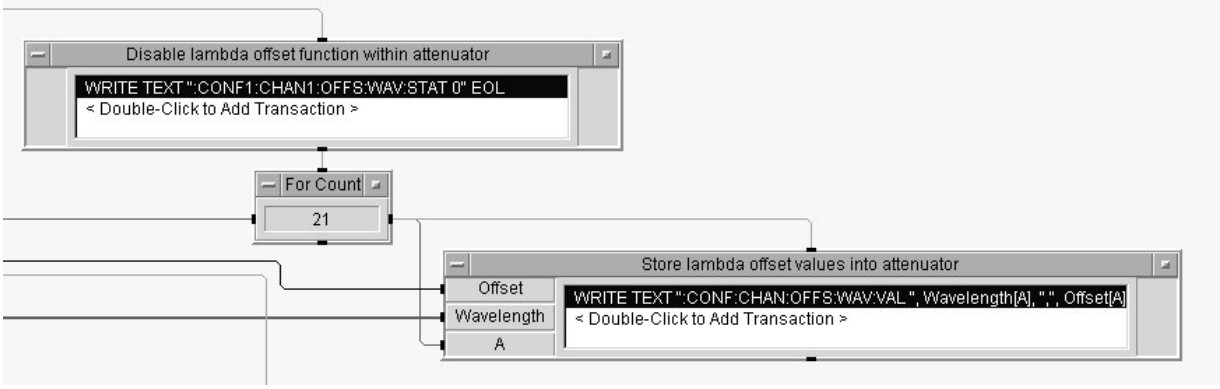

Figure 10 Detailed view of storing wavelength dependent offset values in Attenuator memory

Description

Using a loop every pair (consisting of a wavelength and a calculated offset value) is stored in the attenuator's internal flash memory.
Offset and wavelength values are retrieved from earlier stages in the program.

In classically structured programs these values are retrieved from global variables or accessed via pointers.

Tips & Tricks

Hints for ensuring the repeatability of measurements taken using optical instruments

- Make sure that the connector surfaces are not damaged, are clean and appropriate for the receptacle. Check whether straight or angled connectors should be used.
- For cleaning instructions, refer to the additional literature list at the end of this note.
- Do not stress the fiber face by over-tightening the connector into the receptacle.
- Stabilize free-hanging cables to avoid higher losses and stresses at the connector ends.
- Do not touch the fibers, or move any components or devices during the test.
- Document your test set-up. Include the date, the purpose of measurement, hints, comments, fiber type, connector type, equipment used, last calibration date, next calibration date, and so on.
- Label the cables and connectors used in tests.

How to increase the accuracy of the attenuator

The wavelength dependencies of the internal filter are compensated for automatically by a factory calibration process. However, the accuracy of attenuation may be improved by the following fine tuning procedure:

1. Set the operation wavelength of the attenuator to the wavelength of the source.
2. Set the attenuation to 0dB
3. Perform a power measurement with an external reference power meter and take the value as reference, so that the powermeter display shows 0dB
4. Set the attenuator to 60dB attenuation
5. Adjust the operation wavelength of the attenuator until the power reading of the reference power meter is as close as possible to -60dB.
6. Use this wavelength as the operating wavelength for the attenuator.

Use this procedure for light sources with a broad spectrum (e.g. FP Lasers) to adjust the wavelength setting of the attenuator to the mean (weighted) wavelength of the source.

Glossary

This section is intended to help clarify the meaning of some specialist terms. It cannot substitute for detailed descriptions of particular measurement techniques.

BER
There are two common used terms. Bit Error Rate and Bit Error Ratio.

The Bit Error Rate is a value that represents the number of correctly received bits before one misinterpreted bit occurs. A typical measured value might be BER 1x 10^{12}, which means that the bit following the 10^{12}th bit in a transmission link is misinterpreted.

Bit Error Ratio is the ratio of misinterpreted bits to the total number of transmitted bits over the duration of the test. This means how long the BER Tester compared the incoming data stream to the output data stream. (Gating)
A typical measured value might be 1x 10^{-12}

BERT – Bit Error Rate Tester
An instrument used to measure the quality of a transmission link described by the BER parameter. It consists of a clock and a data generator used to generate test patterns. The error detector counts bit errors by comparing the

incoming data bit-by-bit with the internally generated reference pattern. compares the incoming data stream to the output. Once the streams are synchronized the BERT knows precisely the bit to expect. Refer to related literature list on the last page.
The pattern generator of a BER Tester is driven by a clock that provides the transmission rate. The pattern generator outputs a 2^n-1 long PRBS, which represents a pseudo random binary sequence.

PRBS – Pseudo-Random Bit (Binary) Sequence
Emulates real transmitted application data, which are transmitted. This is generated by a PRBS-Generator, which is implemented in BERT. Test patterns are e.g. 2^7-1, polynomial D7 + D6 + 1 = 0, inverted

DCA - digital communication analyzer
The specific hardware to characterise and verify digital transmission links. Basically the DCA is a high-speed scope with a bandwidth up to 50GHz which includes network analysis test functionality. The mainframe consists of e.g. a high-speed scope with eye compliance testing features and e.g. TDR module (time domain reflectrometry module) to measure reflections on a transmission line, the line impedance (copper wire). Beside the electrical inputs there also optical inputs implemented in the modules. For different standards different modules are existing.

Eye diagrams
These diagrams are the result of a visualization technique of a bit within randomly occurring bit sequences. All incoming bits are drawn on each other, which allows measuring jitter and other parameters to be examined. In general, any oscilloscope with an external trigger input has the functionality to perform such a visualization.

Eye Mask Compliance Testing
Is the verification of the incoming bits on compliance to specified edge points, which are set by definition of transmission standards. This is done by overlaying a restricted area, a mask, within an eye diagram generated by a DCA. The bit traces are not allowed to violate this area. For each transmission standard a specific mask exists. These masks are built in high-speed scopes with eye compliance testing functionality. The mask demands on the transmission link data stream a specific eye opening, extinction ratio, Jitter performance.

Golden TX
A term describing a device with known properties regarding its behaviour in a defined operating environment. This is also often called the Reference Transmitter, which ensures that the transmitted data are always in same shape.

DUT
Device-Under-Test , such as an optical transmitter, optical receiver, transceiver / transponder, the fiber itself, amplifier and so on...

dBm
Output Power referring to 1mW expressed in logarithmic manner.

$$P_{dBm} = 10 * \log_{10}\left(\frac{P_{Watt}}{1mWatt}\right)$$

Agilent Technologies' Test and Measurement Support, Services, and Assistance

Agilent Technologies aims to maximize the value you receive, while minimizing your risk and problems. We strive to ensure that you get the test and measurement capabilities you paid for and obtain the support you need. Our extensive support resources and services can help you choose the right Agilent products for your applications and apply them successfully. Every instrument and system we sell has a global warranty. Support is available for at least five years beyond the production life of the product. Two concepts underlie Agilent's overall support policy: "Our Promise" and "Your Advantage."

Our Promise

Our Promise means your Agilent test and measurement equipment will meet its advertised performance and functionality. When you are choosing new equipment, we will help you with product information, including realistic performance specifications and practical recommendations from experienced test engineers. When you use Agilent equipment, we can verify that it works properly, help with product operation, and provide basic measurement assistance for the use of specified capabilities, at no extra cost upon request. Many self-help tools are available.

Your Advantage

Your Advantage means that Agilent offers a wide range of additional expert test and measurement services, which you can purchase according to your unique technical and business needs. Solve problems efficiently and gain a competitive edge by contracting with us for calibration, extra-cost upgrades, out-of-warranty repairs, and on-site education and training, as well as design, system integration, project management, and other professional engineering services. Experienced Agilent engineers and technicians worldwide can help you maximize your productivity, optimize the return on investment of your Agilent instruments and systems, and obtain dependable measurement accuracy for the life of those products.

By internet, phone, or fax, get assistance with all your test & measurement needs

Online assistance:

www.agilent.com/comms/lightwave

Phone or Fax

United States:
(tel) 1 800 452 4844

Canada:
(tel) 1 877 894 4414
(fax) (905) 206 4120

Europe:
(tel) (31 20) 547 2323
(fax) (31 20) 547 2390

Japan:
(tel) (81) 426 56 7832
(fax) (81) 426 56 7840

Latin America:
(tel) (305) 269 7500
(fax) (305) 269 7599

Australia:
(tel) 1 800 629 485
(fax) (61 3) 9210 5947

New Zealand:
(tel) 0 800 738 378
(fax) 64 4 495 8950

Asia Pacific:
(tel) (852) 3197 7777
(fax) (852) 2506 9284

Product specifications and descriptions in this document subject to change without notice.

Copyright © 2001 Agilent Technologies

August, 23 2001
5988-3159EN

Related Agilent literature:

Need to Test 40 Gb/s? Solutions to accelerate the next generation optical internet p/n 5988-2038EN
Agilent 81250 Parallel Bit-Error-Rate Tester, Product Overview p/n 5968-9188E
Need to test BER? Complete solutions for high-speed digital transmission, Brochure p/n 5968-9250E
Cleaning Procedures for Lightwave Test & Measurement, Pocket Guide p/n 5963-3538F
In the Complex World of Data Transmission, accurate waveform measurements are fast and simple, p/n 5968-8548E
Omniber a family to approach your testing needs, p/n 5988-2182EN
HP SpectralBER 2.5Gb/s DWDM Test Solution, p/n 5968-5448E
Bitalyzer Error Performance Analyzer, p/n 5968-8545E
Accurately characterize your Gbit systems and devices
"HP 71612B 12Gb/s error performance analyzer" , p/n 5968-2810E
Agilent 8163 Lightwave Multimeter
Agilent 8164A Lightwave Measurement System
Agilent 8166A Lightwave Multichannel System Configuration Guide p/n 5988-1571EN
Agilent 81560A/81561A Optical Attenuator
Agilent 81566A/81567A Optical Attenuator with Power Control Technical Specifications p/n 5988-2696EN

Agilent Technologies