ENA Series RF Network Analyzers

Application Note 1463-7

Accurate Mixer Conversion Loss Measurement Techniques

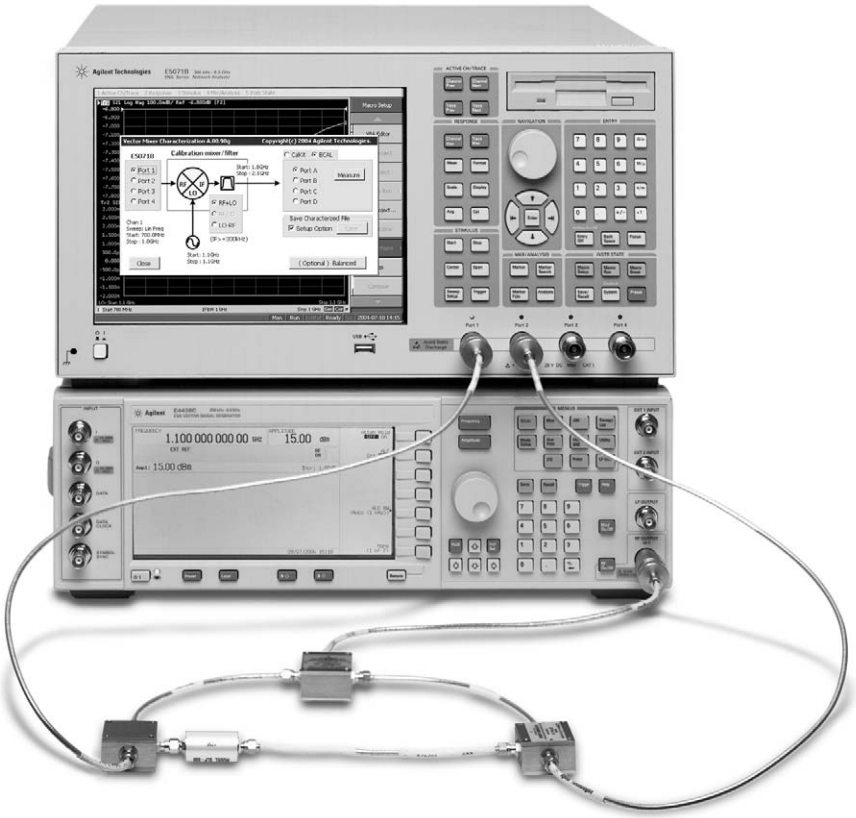

Agilent Technologies

Table of Contents

Introduction 2
Vector-Mixer Measurement Considerations 3
Effects of RF Leakage 3
Verify the RF Leakage 5
Reduce the Effects of RF Leakage 6
Summary 7
Related Literature 8
Web Resources 8

Introduction

Frequency-translating devices (FTDs) such as mixers and converters are at the core of today's wireless communications systems. These devices present unique measurement challenges since input and output frequencies differ, requiring different measurement techniques than those used for linear devices such as filters and amplifiers.

A vector-network analyzer is one of the choices for measuring FTDs, however there are several characteristics that make mixer test more challenging.

This application note will be looking at overcoming measurement challenges associated with FTD measurements by using the frequency-offset mode (FOM) option on the ENA RF network analyzers.

To derive the full benefit from this application note, you should have an understanding of fundamental network analysis and the scalar- and vector-mixer calibrations. Application notes 1463-6, 1408-1, 1408-2, and 1408-3 offer in-depth material regarding mixer measurements and calibration techniques. See the Related Literature section at the end of this document for more information.

Vector-Mixer Measurement Considerations

Effects of RF Leakage

The ENA offers the frequency-offset mode (FOM) option that provides frequency-offset sweep, external signal source control, and fixed-IF/RF measurement capabilities. In addition, the ENA FOM supports two advanced mixer calibration techniques [1]. The first one is the vector-mixer calibration (VMC) that corrects for directivity, source match, load match, and reflection frequency response at each test port by using a characterized calibration mixer/IF-filter pair with de-embedding function. This calibration provides the most accurate measurements of phase and absolute group delay. The second one is the scalar-mixer calibration (SMC) that corrects the mismatches of both the input and output test port by using the known vector reflection coefficients of the test port, device, and the power sensor. This calibration offers the highest accuracy conversion loss/gain measurement results since it is referenced to a traceable standard (power sensor/meter measurements).

The configurations of VMC and SMC are illustrated in Figure 1.

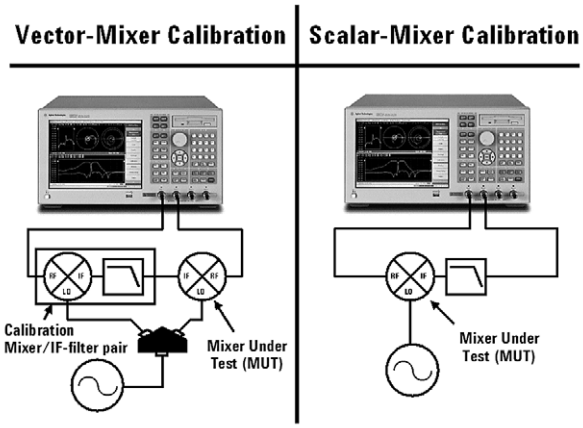

Figure 1. Configurations of vector- and scalar-mixer calibration

As shown in Figure 1, the configuration of the VMC is slightly complex compared to the SMC's since the VMC requires a calibration mixer/IF-filter pair to enable the up/down conversion configuration. Due to the complexity of this measurement configuration, measurement error factors such as the RF leakage should be considered when you perform mixer measurements using the VMC.

1. For detailed information on the ENA's VMC and SMC, see the application note 1436-6, literature number 5989-1420EN.

As shown in Figure 2, the RF leakage of a mixer under test (MUT) is one of the significant error factors in vector-mixer measurements. In this figure, the dotted line represents the RF leakage path when you measure conversion loss (S_{12}) of a MUT. Because of the MUT's poor RF to LO isolation, a part of the RF signal leaks through to the MUT's LO port and then goes into the calibration mixer's LO port.

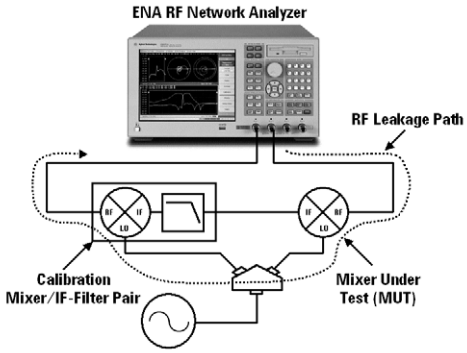

Figure 2. RF leakage path that would result in measurement errors

Consequently, this RF leakage would result in significant measurement errors.

Figure 3 shows the conversion loss measurement data comparison made with a SMC versus a VMC. If a calibration mixer is perfectly reciprocal, the conversion loss data of the SMC and VMC should be equal because they are both measuring the same response. In this example, the same kind of mixer is used as the calibration mixer and MUT and these are not reciprocal. Therefore, the non-reciprocity of this mixer brings the measurement data differences between SMC (S_{21}) and SMC (S_{12}). In addition, conversion loss with a VMC should be in between the SMC (S_{21}) and SMC (S_{12})[1] because the VMC averages the forward and reverse conversion loss of the calibration mixer. However, conversion loss with the VMC has a large ripple especially at the marker point and this is due to the effects of RF leakage.

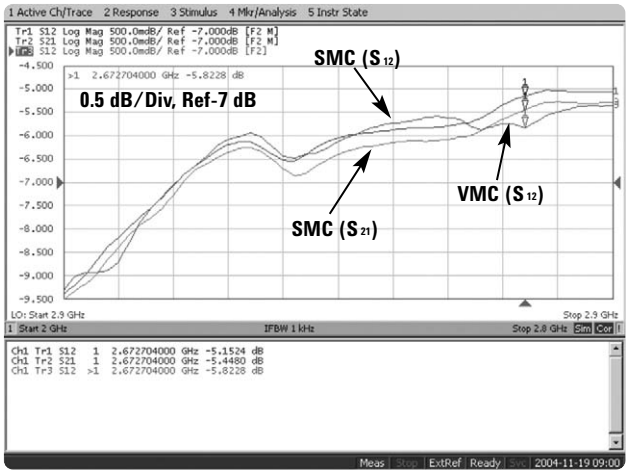

Figure 3. Conversion loss measurement comparison (SMC vs. VMC)

1. For detailed information on VMC accuracy, see the application note 1408-3, literature number 5988-9642EN.

Verify the RF Leakage

In order to verify the RF leakage, you disconnect the cable between the calibration mixer/IF-filter pair and MUT (see Figure 4) and then measure conversion loss (S_{12}). In this example, the terminator is not connected to the calibration mixer's IF port since the low pass filter reflects most of the RF signals. After disconnecting the cable, the de-embedding function should be turned off to verify an actual RF leakage level.

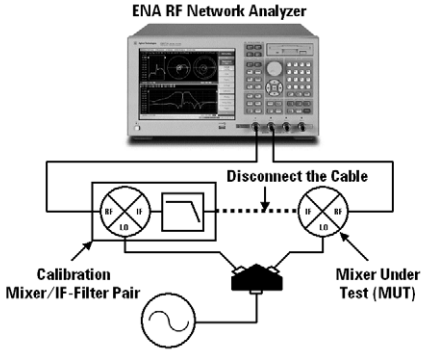

Figure 4. Verify the RF leakage

As you can see in Figure 5, the RF signal leaks to the receiver port through the leakage path and this leakage signal cannot be corrected with the VMC.

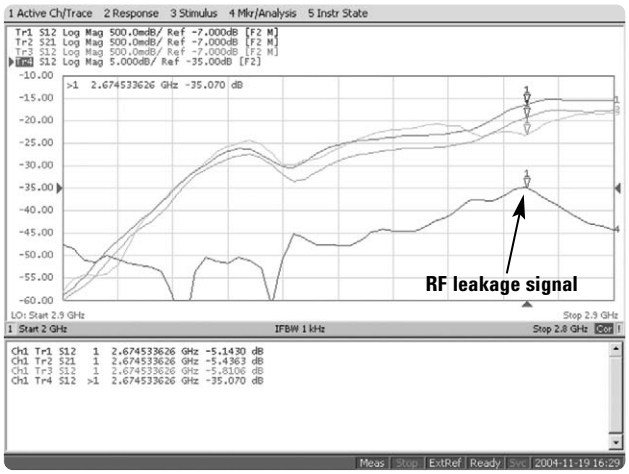

Figure 5. RF leakage through the LO port

In Figure 3, ideal conversion loss with the VMC (S_{12}) is approximately –5.3 dB at the marker point since it should be in between the SMC (S_{12}) and SMC (S_{21}); however, actual measured data is –5.8 dB (a difference of about 0.5 dB). The RF leakage is also observed –35 dB at the marker point (see Figure 5). Therefore, you can calculate this measurement data deviation at the receiver port by using the equation on the next page.

Measurement deviation at receiver port:

Total conversion loss[1] ≅ (conversion loss of MUT) + (conversion loss of calibration mixer)
≅ –5.3 dB x 2 ≅ –10.6 dB
Actual RF leakage ≅ - (|RF leakage| - |total conversion loss|)
≅ - (|35 dB| - |10.6 dB|) ≅ –24.4 dB (0.06)

Measurement data deviation ≅ 1±0.06 ≅ 1.06 (+0.51 dB) or 0.94 (–0.54dB)

This deviation is almost the same as the difference between ideal and measured conversion loss data with the VMC. Through this evaluation, you can easily estimate a rough measurement deviation due to the RF leakage signal by using this method.

Reduce the effects of RF Leakage

As it is described in the VMC's configuration, the RF leakage is one concern for vector-mixer measurements. In order to reduce the RF leakage, it is recommended to use isolators at the LO path that can reduce the leakage significantly. In Figure 6, you can see how the addition of isolators in key positions can reduce the RF leakage. The isolators shown in Figure 6 need to pass the LO signal while preventing the RF signals from leaking through the calibration mixer and MUT.

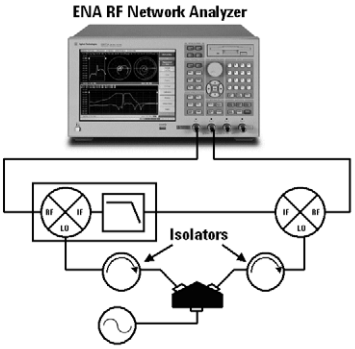

Figure 6. Increase the measurement accuracy by using isolators in key positions

1. The total conversion loss is approximately two times larger than the MUT's.

Figure 7 shows conversion loss measurement results when using the isolators. This graph includes measurement data made with a SMC and VMC in order to verify the effectiveness of the isolators. As previously described, conversion loss with a VMC should be in between the SMC data. By using the isolators, the data made with a VMC (deep color lines) is perfectly in between the SMC (pale color lines) data (see Figure 7). This evaluation result is an excellent proof of effectiveness using the isolators in key positions.

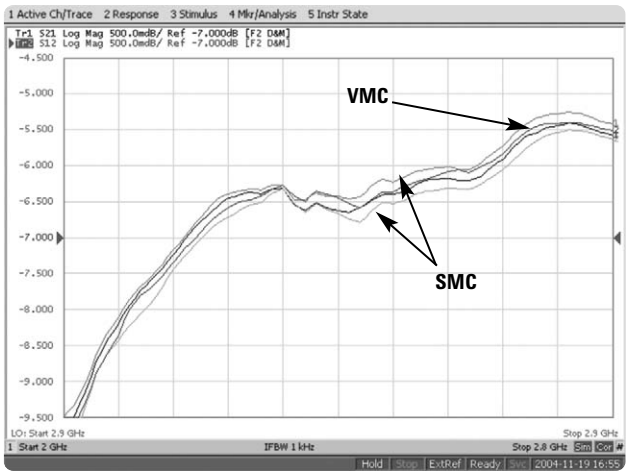

Figure 7. Conversion loss measurement results with isolators

Through this evaluation, you can understand the importance of taking RF leakage measurements when you perform the conversion loss measurements with the VMC.

Summary

The FOM on the ENA RF network analyzer provides advanced mixer-calibration functions such as the VMC and SMC that permit highly accurate mixer measurements. However, it is difficult to accurately evaluate mixers due to complex measurement configurations and to account for unwanted error signals such as the RF leakage.

Related Literature

These documents are available from the library on Agilent's website:
www.agilent.com

Mixer Transmission Measurements Using the Frequency Converter Application,
Application Note 1408-1,
literature number 5988-8642EN

Mixer Conversion-Loss and Group Delay Measurement Techniques and Comparisons,
Application Note 1408-2,
literature number 5988-9619EN

Improving Measurement and Calibration Accuracy Using the Frequency Converter Application,
Application Note 1408-3,
literature number 5988-9642EN

Accurate Mixer Measurement Using the Frequency-Offset Mode,
Application Note 1463-6,
literature number 5989-1420EN

Web Resources

For additional information on the ENA visit:
www.agilent.com/find/ena

Agilent Technologies' Test and Measurement Support, Services, and Assistance

Agilent Technologies aims to maximize the value you receive, while minimizing your risk and problems. We strive to ensure that you get the test and measurement capabilities you paid for and obtain the support you need. Our extensive support resources and services can help you choose the right Agilent products for your applications and apply them successfully. Every instrument and system we sell has a global warranty. Support is available for at least five years beyond the production life of the product. Two concepts underlie Agilent's overall support policy: "Our Promise" and "Your Advantage."

Our Promise

Our Promise means your Agilent test and measurement equipment will meet its advertised performance and functionality. When you are choosing new equipment, we will help you with product information, including realistic performance specifications and practical recommendations from experienced test engineers. When you receive your new Agilent equipment, we can help verify that it works properly and help with initial product operation.

Your Advantage

Your Advantage means that Agilent offers a wide range of additional expert test and measurement services, which you can purchase according to your unique technical and business needs. Solve problems efficiently and gain a competitive edge by contracting with us for calibration, extra-cost upgrades, out-of-warranty repairs, and onsite education and training, as well as design, system integration, project management, and other professional engineering services. Experienced Agilent engineers and technicians worldwide can help you maximize your productivity, optimize the return on investment of your Agilent instruments and systems, and obtain dependable measurement accuracy for the life of those products.

Agilent Email Updates

www.agilent.com/find/emailupdates
Get the latest information on the products and applications you select.

Agilent T&M Software and Connectivity

Agilent's Test and Measurement software and connectivity products, solutions and developer network allows you to take time out of connecting your instruments to your computer with tools based on PC standards, so you can focus on your tasks, not on your connections. Visit
www.agilent.com/find/connectivity
for more information.

For more information on Agilent Technologies' products, applications or services, please contact your local Agilent office. The complete list is available at:

www.agilent.com/find/contactus

Phone or Fax

United States:
(tel) 800 829 4444
(fax) 800 829 4433

Canada:
(tel) 877 894 4414
(fax) 800 746 4866

China:
(tel) 800 810 0189
(fax) 800 820 2816

Europe:
(tel) 31 20 547 2111

Japan:
(tel) (81) 426 56 7832
(fax) (81) 426 56 7840

Korea:
(tel) (080) 769 0800
(fax) (080)769 0900

Latin America:
(tel) (305) 269 7500

Taiwan:
(tel) 0800 047 866
(fax) 0800 286 331

Other Asia Pacific Countries:
(tel) (65) 6375 8100
(fax) (65) 6755 0042
Email: tm_ap@agilent.com

Contacts revised: 9/17/04

Product specifications and descriptions in this document subject to change without notice.

© Agilent Technologies, Inc. 2005

Printed in USA, January 20, 2005
5989-1986EN

Agilent Technologies