Agilent E4887A HDMI TMDS Signal Generator Platform

Data Sheet

Version 2.1

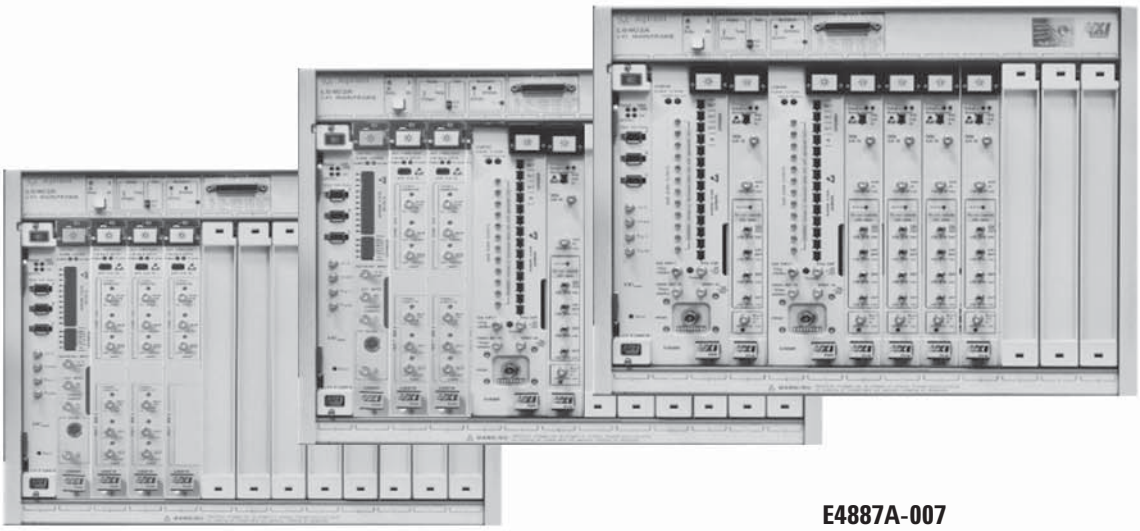

E4887A-007

E4887A-037

E4887A-003

Agilent Technologies

Convenient Compliance Testing and Characterization of HDMI 1.3 Devices

The High-Definition Multimedia Interface (HDMI) specification ensures the interoperability of all digital audio and video devices. Agilent offers solutions for testing HDMI sources, cables and sinks. The instruments of each solution provide outstanding performance, ideal for characterizing HDMI devices. The dedicated HDMI test automation software controls the instruments and simplifies HDMI source, cable and sink compliance testing.

Source test solution
The DSO80000 Series Oscilloscope is the core of Agilent's source test solution. The high bandwidth, low noise and excellent probing solutions of these real-time oscilloscopes show clear eye diagrams and the real margin of your HDMI sources. The N5399A software guides you confidently through most compliance source tests.

Cable test solution
The E5971C network analyzer and the 86100C DCA-J, with its TDR modules and software, provide impedance, intra- and inter-pair skew measurements for HDMI cables.

Sink test solution
The E4887A HDMI TMDS Signal Generator Platform provides parallel signals with low intrinsic jitter and fast edges. The HDMI Frame Generator Software is ideal for manual testing and debugging. It configures the generator with a wide variety of HDMI video frames. The software controls up to two E4438C Vector Signal Generators or 33250A Arbitrary Waveform Generators as well as the TMDS Signal Generator for defined jittered signals for jitter tolerance testing.

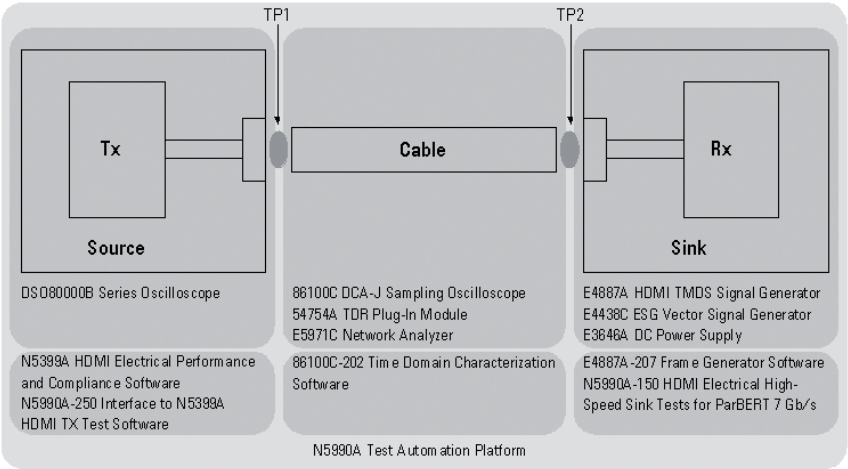

Figure 1: Agilent provides solutions for each HDMI test.

High performance connections
Agilent offers various fixtures for HDMI testing. The N1080A test point access adapters (TPAs) provide SMA to plug, or receptacle to SMA connections with very low loss and high bandwidth. The N5404A transmitter test fixture is especially developed for HDMI source testing.

Test automation
The N5990A Test Automation Platform enables HDMI compliance testing and systematic, in-depth characterization with high data quality and throughput. The software controls all related instruments and directs you step by step through the tests. All test results are documented in Microsoft® Excel format.

E4887A HDMI TMDS Signal Generator Platform

The core of the Agilent HDMI sink test solution is the E4887A HDMI TMDS Signal Generator Platform. It offers a choice of three configurations:

E4887A-007: High resolution HDMI TMDS Signal Generator
Target Audience: ATC, chip vendors

- In-depth characterization beyond today's test needs up to 7 Gb/s including separate and combined jitter tolerance characterization for all data rates
- Highest signal performance with low intrinsic jitter and fast transition times
- Fast automated CTS compliant test routines

E4887A-037: Standard compliant and characterisation test
Target Audience: R&D labs for Audio, Video, TV requiring compliance pass/fail and high speed characterization

- CTS based compliant pass/fail testing on all data rates
- Combined jitter tolerance compliance and characterization testing at all data rates
- Separate jitter tolerance compliance and characterization starting at 74 MHz pixel clock
- Upgrade to E4887A-007

E4887A-003: Economic high speed tester up to 3.4 Gb/s
Target Audience: HDMI related development for economic device characterization.

- Covers most critical HDMI tests starting at 74 MHz pixel clock
- Combined and separate jitter tolerance characterization and compliance testing starting at 74 MHz pixel clock
- Ideal test solution for debug and stimulus in R&D
- Upgrade to E4887A-037

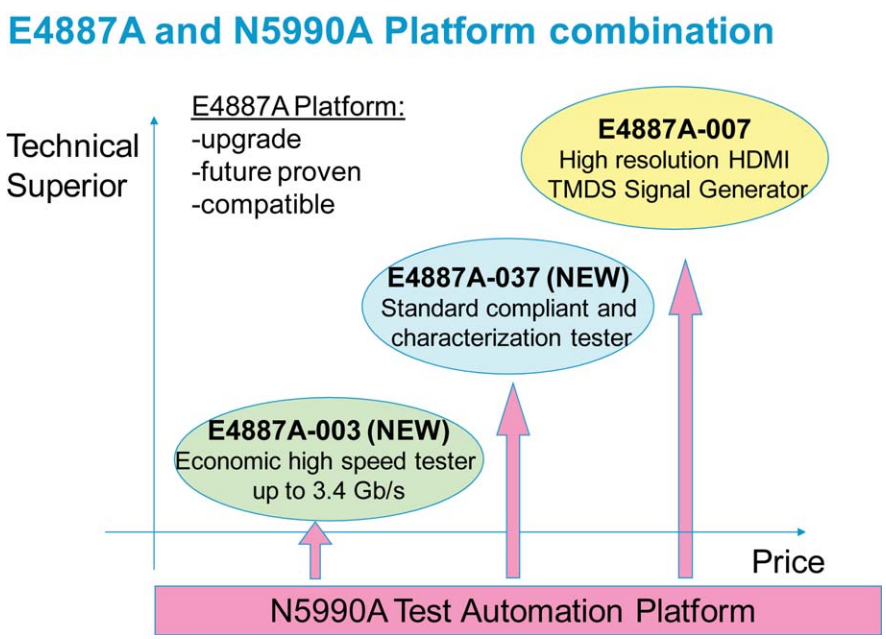

Figure 2: E4887A and N5990A platform combination

E4887A and N5990A Platform Combination

High quality signals for clock and data signals
Clean signals with fast transition times and very low intrinsic jitter are necessary for device characterization. The E4887A HDMI TMDS Signal Generator Platform is based on Agilent's ParBERT 81250, which provides industry leading signal performance for high speed characterization.

TMDS signal generator for independent jitter injection on the clock signal and data signals
In combination with the E4438C Vector Signal Generator or the 33250A Arbitrary Waveform Generator, the E4887A HDMI TMDS Signal Generator Platform offers linear clock and data jitter injection compliant to HDMI CTS 1.3. Especially designed for jitter tolerance device characterization, it lets you stress your device with independent jitter components on the clock and data signal for in-depth sink characterization.

Easy to use with many video formats
You can choose from a vast variety of video formats. The frame generator software set ups the TMDS Signal Generator with the chosen format. The jitter injection is also conveniently controlled using the frame generator software.

Integrated into compliance test software
The N5990A Test Automation Software integrates the E4887A HDMI TMDS Signal Generator Platform and the DSO80000 Series Real-Time Oscilloscope. This HDMI sink test solution provides calibrated jitter injection for accurate jitter tolerance characterization and compliance tests with a high test throughput.

Future proof with data rates up to 7 Gb/s
The high resolution version of the E4887A–007 HDMI TMDS Signal Generator is able to generate signals up to 7 Gb/s and protects your investment for future device characterization.

Cable emulators designed for HDMI 1.3
A set of different cable emulators especially designed for HDMI 1.3 are offered to match CAT 1 and CAT 2 reference cables.

E4887A HDMI Platform Jitter Tolerance Capabilities

Enabling high-speed on most recent HDMI devices is the most critical and important requirement for in-depth characterization. The E4887A HDMI TMDS Signal Generator Platform is exactly addressing this test-need through all individual configurations. Paired with excellent signal performance, the test engineer has got the highest benefit for true and exact device characterization.

E4887A-007 High resolution HDMI TMDS Signal Generator

Jitter Tolerance Testing	D_Jitter on TMDS_ Clock E4887A-007		D_Jitter on TMDS_ Data E4887A-007	
Frequency	Comp.	Charact.	Comp.	Charact.
27 MHz TMDS Clock	✓	>2.5 TBit	✓	>2.5 TBit
74.25 MHz TMDS Clock	✓	>2.5 TBit	✓	>2.5 TBit
148.5 MHz TMDS Clock	✓	>2.5 TBit	✓	>2.5 TBit
222.75 MHz TMDS Clock	✓	>2.5 TBit	✓	>2.5 TBit
297 MHz TMDS Clock	✓	>2.5 TBit	✓	>2.5 TBit
340 MHz TMDS Clock	✓	>2.5 TBit	✓	>2.5 TBit

Table 1: E4887A—007 jitter tolerance capabilities

E4887A-037 Standard compliant and characterization tester

Jitter Tolerance Testing	D_Jitter on TMDS_Clock E4887A-037		D_Jitter on TMDS_Data E4887A-037	
Frequency	Comp.	Charact.	Comp.	Charact.
27 MHz TMDS Clock	✓	>2.5 TBit	–	–
74.25 MHz TMDS Clock	✓	>2.5 TBit	✓	0.3713 TBit
148.5 MHz TMDS Clock	✓	>2.5 TBit	✓	0.74 TBit
222.75 MHz TMDS Clock	✓	>2.5 TBit	✓	1.11 TBit
297 MHz TMDS Clock	✓	>2.5 TBit	✓	1.485 TBit
340 MHz TMDS Clock	✓	>2.5 TBit	✓	1.7 TBit

Table 2: E4887A-037 jitter tolerance capabilities

E4887A-003 Economic high speed tester up to 3.4 Gb/s

Jitter Tolerance Testing	D_Jitter on TMDS_Clock E4887A-003		D_Jitter on TMDS_Data E4887A-003	
Frequency	Comp.	Charact.	Comp.	Charact.
27 MHz TMDS Clock	–	–	–	–
74.25 MHz TMDS Clock	✓	0.3713 TBit	✓	0.3713TBit
148.5 MHz TMDS Clock	✓	0.74 TBit	✓	0.74 TBit
222.75 MHz TMDS Clock	✓	1.11 TBit	✓	1.11 TBit
297 MHz TMDS Clock	✓	1.485 TBit	✓	1.485TBiutt
340 MHz TMDS Clock	✓	1.7 TBit	✓	1.7 TBit

Table 3: E4887A—003 jitter tolerance capabilities
Note: TBit = One bit time at the specified TMDS rate (1 TBit = 1 Unit Interval)

High Resolution Characterization and Compliance Tester E4887A-007 TMDS Signal Generator up to 7 Gb/s

The E4887A-007 TMDS Signal Generator configuration for independent jitter injection on TMDS clock and TMDS data lane allows the in-depth characterization of HDMI sink devices from 270 Mb/s up to any future bitrate of 7 Gb/s. For compliance testing of any HDMI device, this setup also provides jitter injection of clock and data jitter components on the TMDS clock only. Data generator bit rates up to 7 Gb/s help to protect your investment.

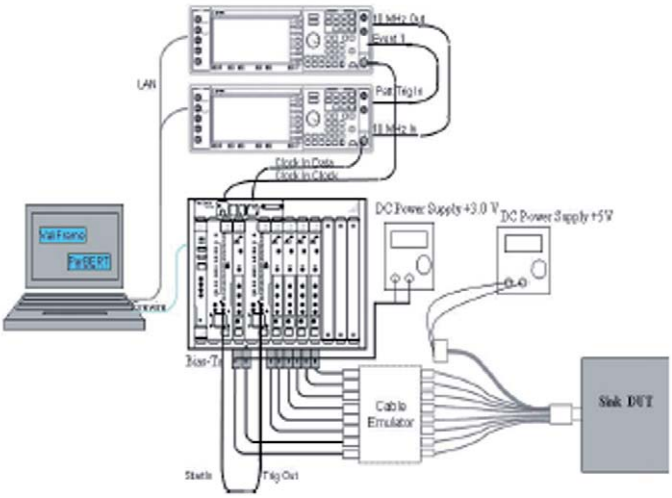

Figure 3: Characterization Setup

Instruments

1x E4887A-007	HDMI TMDS Generator max. bit rate 7 Gb/s
2x E4438C	ESG Vector Signal Generator with options see ordering instructions page 15
1x E3646A	DC Power Supply, dual output, dual range

Software

1x E4887A-207	HDMI Frame Generator Software for E4887A

Accessories

1x E4887A-308	Accessory and cable kit for E4887A-007
1x N1080A-H01	Test point access adapter plug
1x N1080A-H02	Test point access adapter receptacle 2 units needed for cable test
1x N1080A-H03	Low frequency control board

BitifEye Digital Test Solutions (www.bitifeye.com) required:

1x BIT-HDMI-BTK-0007	Bias tee kit for E4887A-007
1x BIT-HDMI-PPD-7373	Probe power distribution kit for DSO 8000 series

For additional accessories, see the E4887A ordering instructions on page 17.

For automated compliance sink and source testing

1x DSO80000	Real-time Oscilloscope
1x N5399A	HDMI software package for DSO80000
1x N5990A	Test Automation Platform with options -010, -150, -250, and -001 recommended

For more details on the cable emulators see page 16.

E4887A-007	
Frequency range	620 Mb/s to 7 Gb/s internal clock mode[1)] 620 Mb/s to 6 Gb/s ESG E44838C with opt. 506 used as clock source 620 Mb/s to 4 Gb/s ESG E44838C with opt. 504 used as clock source
Skew between data channels	20 ps typ.[2)3)5)]
Delay = start delay + fine delay	Can be specified as leading edge delay in fraction of bits in each channel
Start delay range	0 ns to 100 ns
Fine delay range	±1 period[4)]
Delay resolution	100 fs
Delay accuracy	±10 ps ±20 ppm relative to zero-delay placement[3)5)]
Relative delay accuracy	±2 ps ±2% typ.[3)]

Table 3: TMDS Signal Generator: timing specifications
1) E4438C ESG Vector Signal Generator needed for jitter injection
2) After cable deskewing at customer levels and unchanged system frequency.
3) @ 25 °C to 40 °C ambient temperature
4) Can be changed without stopping the system
5) For N4910A cable set (2.4 mm connector, 24" matched pair)

E4887A-007 (N4874A)	
Output	Differential or single ended, 2.4 mm(f)[1)]
Impedance	50 Ω typ.
Output amplitude/resolution	0.1 Vpp to 1.8 Vpp / 5 mV
Output voltage window	-2 V to +3 V; for HDMI output up to 3.3V use Bias Tee kit[2)]
Data formats	NRZ, DNRZ
Transition times 20% to 80%	<20 ps[4)]
Intrinsic jitter	9 ps peak to peak typ.[3)4)]

Table 4: TMDS Signal Generator: output specifications
1) In single ended mode, the unused output must be terminated with 50 Ω to GND
2) Voltage window direct at module output is -2 V to +3 V; DC power supply needed with Bias Tee.
3) Clock out to data out of same module. NRZ data format
4) For N4910A cable set (2.4 mm connector, 24" matched pair)

E4887A-007 (N4874A)	
PRBS/PRWS	2n-1 n = 7, 9, 10, 11, 15, 23, 31
Errored PRBS/PRWS	2n-1 n = 7, 9, 10, 11, 15
Extended ones or zeroes	2n-1 n = 7, 9, 10, 11, 15
User definable memory based patterns	Up to 64 Mbit
Video formats	See table 4, requires E4887A-207 HDMI frame generator software

Table 5: TMDS Signal Generator: pattern and video formats

Specification assumptions

The specifications in this data sheet describe the instrument's warranted performance. Non-warranted values are stated as typical (typ.).
All specifications are valid from 10 °C to 40 °C ambient temperature after a 30 minute warm-up phase, with outputs and inputs terminated with 50 Ω to ground at ECL levels if not specified otherwise.

Standard Compliant and Characterization Tester E4887A-037 TMDS Signal Generator up to 3.4 Gb/s

The E4887A-037 TMDS Signal Generator offers fastest compliance testing based on CTS requirements including characterization capabilities up to 3.4 Gb/s.

Jitter Tolerance capabilities:

- Combined jitter tolerance compliance and characterization on all data rates
- Separate jitter tolerance compliance start at 74 MHz pixel clock.
- Separate jitter tolerance characterization starting at 148 MHz pixel clock

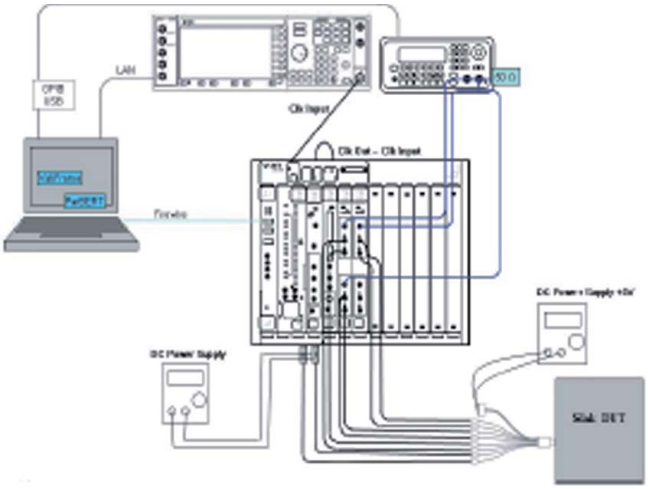

Figure 4: Characterization Setup up to 3.4Gb/s

Instruments

1x E4887A-037	HDMI TMDS Generator max. bit rate 3.4 Gb/s
1x E4438C	ESG Vector Signal Generator with options see page 18.
1x 33220A	Arbitrary Waveform Generator up to 20 MHz
1x E3646A	DC Power Supply, dual output, dual range

Software

1x E4887A-207	HDMI Frame Generator Software for E4887A

Accessories

1x E4887A-309	Accessory and cable kit for E4887A-037
1x N1080A-H01	Test point access adapter plug
1x N1080A-H02	Test point access adapter receptacle 2 units needed for cable test
1x N1080A-H03	Low frequency control board

BitifEye Digital Test Solutions (www.bitifeye.com), required:

1x BIT-HDMI-BTK-0037	Bias Tee kit for E4887A-037
1x BIT-HDMI-PPD-7373	Probe power distribution kit for DSO 8000 series

For additional accessories, see the E4887A ordering instructions on page 18.

For automated compliance sink and source testing

1x DSO80000	Real-time Oscilloscope
1x N5399A	HDMI software package for DSO80000
1x N5990A	Test Automation Platform with options -010, -150 , -250, and -001 recommended

For more details on the cable emulators see page 16.

E4887A-037	
Frequency range	20.843 Mb/s to 3.4 Gb/s (E4861B/E4862B) internal clock mode[1)] 620 Mb/s to 6 Gb/s (N4874A) ESG E44838C with opt. 506 used as clock source [2)] 620 Mb/s to 4 Gb/s (N4874A) ESG E44838C with opt. 504 used as clock source
Skew between data channels	50 ps typ.[3)4)]
Delay = start delay + fine delay	Can be specified as leading edge delay in fraction of bits in each channel
Start delay range	0 ns to 200 ns
Fine delay range	±1 period[5)]
Delay resolution	1 ps
Delay accuracy	±25 ps ±50 ppm relative to zero-delay placement[3)]

Table 6: TMDS Signal Generator: timing specifications
1) 33250A Arbitrary Waveform Generator needed for jitter injection
2) E4438C ESG Vector Signal Generator needed for jitter injection
3) After cable deskewing at customer levels and unchanged system frequency.
4) @ 25 °C to 40 °C ambient temperature
5) Can be changed without stopping the system

E4887A-037 (E4861B/62B)	
Output	Differential or single ended, 3.5 mm(f)
Impedance	50 Ω typ.
Output amplitude/resolution	0.05 Vpp to 1.8 Vpp / 10 mV
Output voltage window	-2 V to +3.5 V; for HDMI output up to 3.3V use Bias Tee kit[1)]
Data formats	NRZ, DNRZ
Transition times 20% to 80%	<75 ps
Intrinsic jitter	<30 ps peak to peak typ.[2)]

Table 7: TMDS Signal Generator: output specifications
1) Voltage window direct at module output is -2 V to +3.5 V; DC power supply needed with Bias Tee. For output voltage > 3 V the termination voltage > 3 V needs to be applied
2) Measured with E4808A Clock Module, spec as intra channel jitter

E4887A-037 (E4861B/62B)	
PRBS/PRWS	2n-1 n = 7, 9, 10, 11, 15, 23, 31
Errored PRBS/PRWS	2n-1 n = 7, 9, 10, 11, 15
Extended ones or zeroes	2n-1 n = 7, 9, 10, 11, 15
User definable memory based patterns	Up to 16 Mbit
Video formats	See table 4, requires E4887A-207 HDMI frame generator software

Table 8: TMDS Signal Generator: pattern and video formats

Specification assumptions

The specifications in this data sheet describe the instrument's warranted performance. Non-warranted values are stated as typical (typ.).
All specifications are valid from 10 °C to 40 °C ambient temperature after a 30 minute warm-up phase, with outputs and inputs terminated with 50 Ω to ground at ECL levels if not specified otherwise.

Economic High Speed Test up to 3.4 Gb/s E4887A-003 Signal Generator

The economic E4887A-003 Signal Generator provides compliant HDMI sink testing for HDMI devices from 740 Mbit up to 3.4 Gb/s and does fully follow the test requirements of the HDMI CTS specification. Independent jitter injection on TMDS clock and TMDS data is provided as well as jitter injection of clock and data jitter components on the TMDS clock.
Jitter Tolerance capabilities are provided:

- Combined and separate Jitter tolerance compliance starting at 74 MHz pixel clock
- Combined and separate Jitter tolerance characterization starting at 148 MHz pixel clock

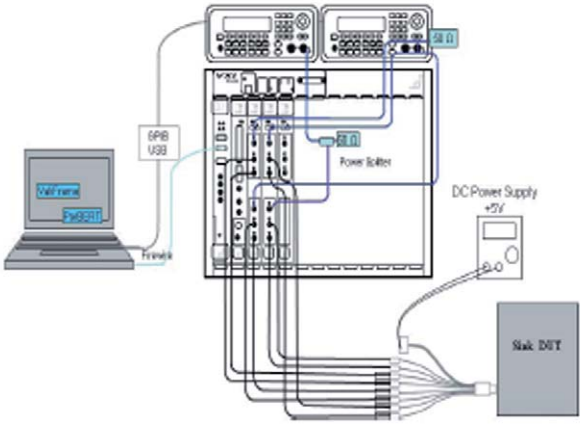

Figure 5: Test Setup up to 3.4Gb/s

Instruments

1x E4887A-003	HDMI signal generator max. bit rate 3.4 Gb/s
2x 33220A	Arbitrary Waveform Generator up to 20 MHZ
1x E3646A	DC power supply, dual output, dual range

Software

1x E4887A-207	HDMI frame generator software for E4887A

Accessories

1x E4887A-303	Accessory and cable kit for E4887A-003
1x N1080A-H01	Test point access adapter plug
1x N1080A-H02	Test point access adapter receptacle 2 units needed for cable test
1x N1080A-H03	Low frequency control board

BitifEye Digital Test Solutions (www.bitifeye.com), required:

1x BIT-HDMI-BTK-0003	Bias Tee kit for E4887A-003
1x BIT-HDMI-PPD-7373	Probe power distribution kit for DSO 8000 series

For additional accessories, see the E4887A ordering instructions on page 19.

Additional for compliance sink and source testing

1x DSO80000	Real-time Oscilloscope
1x N5399A	HDMI software package for DSO80000
1x N5990A	Test Automation Platform with options-010, -150, -250, and -001 recommended

For more details on the cable emulators see page 16.

E4887A-003	
Frequency range	20.843 Mb/s to 3.4 Gb/s (E4861B/E4862B) internal clock mode [1)]
Skew between data channels	50 ps typ.[2)3)]
Delay = start delay + fine delay	Can be specified as leading edge delay in fraction of bits in each channel
Start delay range	0 ns to 200 ns
Fine delay range	±1 period[4)]
Delay resolution	1 ps
Delay accuracy	±25 ps ±50 ppm relative to zero-delay placement[3)]

Table 9: 3.4 Gb/s Signal Generator: timing specifications
1) 33250A Arbitrary Waveform Generator needed for jitter injection
2) After cable deskewing at customer levels and unchanged system frequency.
3) @ 25 °C to 40 °C ambient temperature
4) Can be changed without stopping the system

E4887A-003 (E4861B/62B)	
Output	Differential or single ended, 3.5 mm(f)
Impedance	50 Ω typ.
Output amplitude/resolution	0.05 Vpp to 1.8 Vpp / 10 mV
Output voltage window	-2 V to +3.5 V; for HDMI output up to 3.3V use Bias Tee kit[1)]
Data formats	NRZ, DNRZ
Transition times 20% to 80%	<75 ps
Intrinsic jitter	<30 ps peak to peak typ.[2)]

Table 10: 3.4 Gb/s Signal Generator: output specifications
1) Voltage window direct at module output is -2 V to +3.5 V; DC power supply needed with Bias Tee. For output voltage > 3 V the termination voltage > 3 V needs to be applied
2) Measured with E4808A clock module, spec as intra channel jitter

E49887A-003 (E4861B/62B)	
PRBS/PRWS	2n-1 n = 7, 9, 10, 11, 15, 23, 31
Errored PRBS/PRWS	2n-1 n = 7, 9, 10, 11, 15
Extended ones or zeroes	2n-1 n = 7, 9, 10, 11, 15
User definable memory based patterns	Up to 16 Mbit
Video formats	See table 4, requires E4887A-207 HDMI frame generator software

Table 11: 3.4 Gb/s Signal Generator: pattern and video formats

Specification assumptions

The specifications in this data sheet describe the instrument's warranted performance. Non-warranted values are stated as typical (typ.).
All specifications are valid from 10 °C to 40 °C ambient temperature after a 30 minute warm-up phase, with outputs and inputs terminated with 50 Ω to ground at ECL levels if not specified otherwise.

E4887A-203 HDMI Frame Generator Software

Select from a comprehensive variety of video modes. The HDMI Frame Generator software sets up the HDMI TMDS Signal Generator with the selected video frame and color depth in one click. It offers DVI compliant modes, too.

Control the TMDS Signal Generator conveniently from the instrument parameter screen of the frame generator software. Define clock and data swing or change the data rate. Select the jitter mix you need for your device.

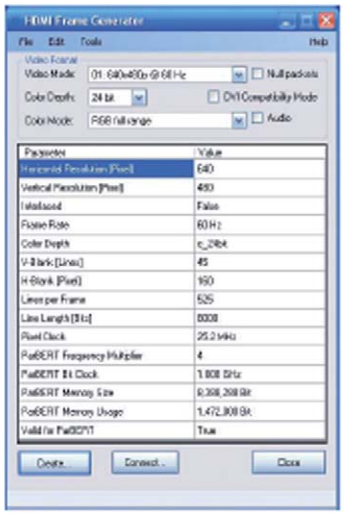

Figure 6: Push button video frame selection.

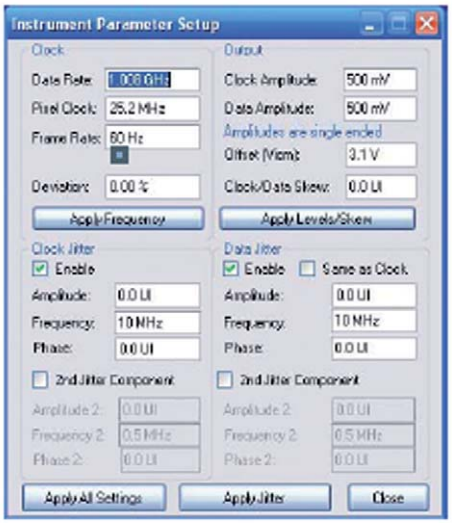

Figure 7: Easy control of whole TMDS Signal Generator .

Create your own color scheme with the HDMI Frame Generator Software. Define start and end value for red, green and blue and look at the result with the preview screen, or simply select the compliance gray-scale scheme.

Figure 8: Preview Frame Generator

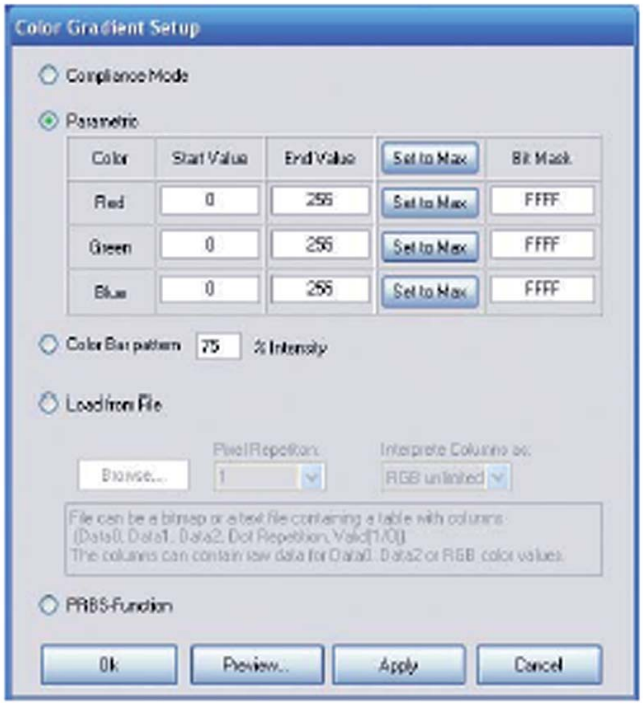

Figure 9: Color gradient setup to change the color scheme

Supported Video Modes by E4887A-207 (I)

CEA Video Code	Format	Frame Rate	Picture Aspect Ratio	24 bit	30 bit	36 bit	48 bit
1	640x480p	60 Hz	4:3	X	X	X	X
2	720x480p	60 Hz	4:3	X		X	X
3	720x480p	60 Hz	16:9	X		X	X
4	1280x720p	60 Hz	16:9	X		X	X
5	1920x1080i	60 Hz	16:9	X	3G	X	X
6	1440x480i	60 Hz	4:3	X		X	X
7	1440x480i	60 Hz	16:9	X		X	X
8	1440x240p	60.115 Hz	4:3	X	X	X	X
9	1440x240p	59.886 Hz	16:9	X	X	X	X
10	2880x480i	60 Hz	4:3	X		X	X
11	2880x480i	60 Hz	16:9	X		X	X
12	2880x240p	60.115 Hz	4:3	X	X	X	X
13	2880x240p	59.886 Hz	16:9	X	X	X	X
14	1440x480p	60 Hz	4:3	X		X	X
15	1440x480p	60 Hz	16:9	X		X	X
16	1920x1080i	60 Hz	16:9	X		X	X
17	720x576p	50 Hz	4:3	X	X	X	X
18	720x576p	50 Hz	16:9	X	X	X	X
19	1920x720p	50 Hz	16:9	X	X	X	X
20	1920x1080i	50 Hz	16:9	X	X	X	X
21	1440x576i	50 Hz	4:3	X	X	X	X
22	1440x576i	50 Hz	16:9	X	X	X	X
23	1440x288p	50.08 Hz	4:3	X	X	X	X
24	1440x288p	49.761 Hz	16:9	X	X	X	X
25	2880x576i	50 Hz	4:3	X	X	X	X
26	2880x576i	50 Hz	16:9	X	X	X	X
27	2880x288p	50.08 Hz	4:3	X	X	X	X
28	1440x576p	49.761 Hz	16:9	X	X	X	X
28	1920x1080p	49.92 Hz	16:9	X	X	X	X
29	1920x1080p	50 Hz	4:3	X	X	X	X
30	1920x1080p	50 Hz	16:9	X	X	X	X
31	1920x1080p	50 Hz	16:9	X	X	X	X
32	2880x480p	23.976 Hz	16:9	X			X
32	2880x480p	24 Hz	16:9	X			X
33	2880x576p	25 Hz	16:9	X	X	X	X
34	1920x1080p	29.976 Hz	16:9	X	X	X	X
34	1920x1080p	30 Hz	16:9	X	X	X	X
35	2880x480p	60 Hz	4:3	X		X	X
36	2880x480p	60 Hz	16:9	X		X	X
37	2880x576p	50 Hz	4:3	X	X	X	X
38	2880x576p	50 Hz	16:9	X	X	X	X

Table 12: E4887A-207 Frame Generator Software: available video formats

„X“ -> This video mode is supported by E4887A-007; -037; -003
„3G“ -> This video mode is supported by E4887A-003; -037

Supported Video Modes by E4887A-207 (II)

CEA Video Code	Format	Frame Rate	Picture Aspect Ratio	24 bit	30 bit	36 bit	48 bit
39	1920x1080i	50 Hz	16:9	X	X	X	X
40	1920x1080i	100 Hz	16:9	X	X	X	X
41	1280x720p	100 Hz	16:9	X		X	X
42	720x576p	100 Hz	4:3	X	X	X	X
43	720x576p	100 Hz	16:9	X	X	X	X
44	1440x576i	100 Hz	4:3	X	X	X	X
45	1440x576i	100 Hz	16:9	X	X	X	X
46	1920x1080i	119.88 Hz	16:9	X		X	X
46	1920x1080i	120 Hz	16:9	X		X	X
47	1280x720p	119.88 Hz	16:9	X			X
47	1280x720p	120 Hz	16:9	X			X
48	720x480p	119.88 Hz	4:3	X			X
48	720x480p	120 Hz	4:3	X		3G	X
49	720x480p	119.88 Hz	16:9	X		3G	X
49	720x480p	120 Hz	16:9	X		3G	X
50	1440x480i	119.88 Hz	4:3	X		3G	X
50	1440x480i	120 Hz	4:3	X		3G	X
51	1440x480i	119.88 Hz	16:9	X		3G	X
51	1440x480i	120 Hz	16:9	X		3G	X
52	720x576p	200 Hz	4:3	X	X	X	X
53	720x576p	200 Hz	16:9	X	X	X	X
54	1440x576i	200 Hz	4:3	X	X	X	X
55	1440x576i	200 Hz	16:9	X	X	X	X
56	720x480p	200 Hz	4:3	X			X
57	720x480p	240 Hz	16:9	X			X
58	1440x480i	240 Hz	4:3	X			X
59	1440x480i	240 Hz	16:9	X			X

Table 13: E4887A-207 Frame Generator Software: available video formats

„X“ -> This video mode is supported by E4887A-007; -037; -003
„3G“ -> This video mode is supported by E4887A-003; -037

E4887A-10x Series Cable Emulators

The E4887A-10x series offers different cable emulators for compliant jitter tolerance testing. Each cable emulator is packaged and has 3.5 mm (f) connectors for TMDS clock and all three TMDS data lanes. Each lane is differential and matched in length.

The cable emulators are offered in 3 versions:
E4887A-101 CTS 1.3 low frequency ≤ 74.25 MHz
E4887A-102 CTS 1.3 high frequency > 74.25 MHz
E4887A-103 CTS 1.3 compliant passive EQ cable emulator

The E4887A-101 emulates a CAT 1 reference cable, while E4887A-102 emulates a CAT 2 reference cable.

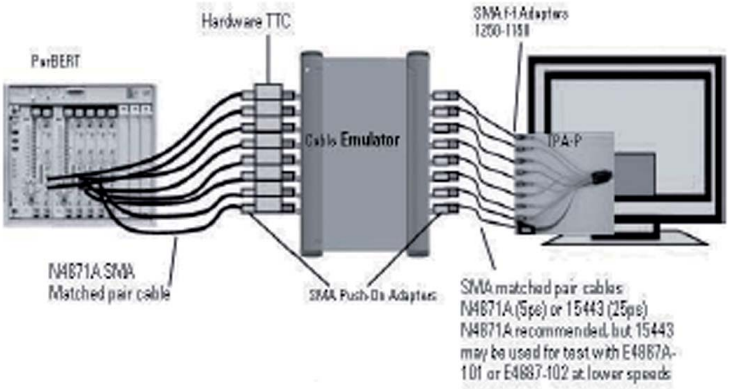

Figure 10: Typical cable emulator application

	E4887A-101*	E4887A-102**
Intra-Pair Skew	≤ 50 ps	≤ 15 ps
Inter-Pair Skew	< 250 ps	< 100 ps
Amplitude matching	< 2%	< 2 %
Amplitude accuracy	< 5 %	< 7 %

Table 14: Detailed specification
*** measured at 742.5 Mb/s using 1-0 pattern**
**** measured at 3400 Mb/s using 1-0 pattern**

Figure 11: Cable Emulator

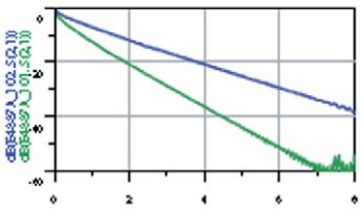

Figure 12: Frequency characteristics

E4887A-007 Ordering Instructions

High resolution HDMI TMDS Signal Generator	
620 Mb/s to 7 Gb/s	E4887A-007
Includes: 2x E4809A; 5x N4874A; 1x E4875A; 1x 81250A-149; 1x 81250A-013; 1x E4809A-001; 1x 81250A-015	
Vector signal generator for jitter injection	
ESG Vector Signal Generator (2x)	E4438C
250 kHz to 6 GHz, requires option –UNJ	E4438C-506
250 kHz to 4 GHz, requires option -1E5	E4438C-504
Internal baseband generator	E4438C-601
Frame generator software	
For TMDS Signal Generator E4887A-007	E4887A-207
Accessories and cables	
Accessory and cable kit for E4887A-007	E4887A-308
Includes: 11x N4912A; 5x N4871A; 2x 15442A; 1x1250-2015; 1x 8710-1582 2x 1250-1744; 8x 83059B; 2x 8120-1839; 1x 1250-2206	
CTS 1.3 low frequency cable emulator	E4887A-101
CTS 1.3 high frequency cable emulator	E4887A-102
Passive equalizer cable emulator (8 pieces)	E4887A-103
HDMI test point access, plug	N1080A-H01
HDMI test point access, receptacle	N1080A-H02
HDMI Low Speed Board	N1080A-H03
BitifEye Digital Test Solutions (www.bitifeye.com):	
Bias Tee Kit for E4887A-007	BIT-HDMI-BTK-0007
Transition Time Converter Kit for E4887A-007	BIT-HDMI-TTC-0007
Test automation Cable Kit for E4887A-007/-037	BIT-HDMI-TAK-0737
Low Speed Kit for E4887A	BIT-HDMI-LSK-7373
Probe Power Distribution Kit for DSO80000 series oscilloscope	BIT-HDMI-PPD-7373
Snap-on Connector Kit (80 pc.)	BIT-GEN-SCK-0080
Network Connection Kit (8-port LAN switch and 5 LAN cable)	BIT-GEN-NCK-0001
DC-Power supply	
Dual output, 0-8V and 0-20V / 1.5A, 60W, GPIB	E3646A
Power Supply for 3.3V	E3600 series
LAN to GPIB converter	USB/GPIB Interface
For HDMI compliance testing:	
Real-Time Oscilloscope	DSO80000 or higher
Differential probes and probe heads	1169A (4x), N5380A (5x)
HDMI software package for DSO80000	N5399A
Test automation platform	N5990A-010
HDMI sink test	N5990A-150
Interface to N5399A HDMI software	N5990A-250
Recommended: Data base interface	N5990A-001

Standard compliant and characterisation tester	
20.834 Mb/s to 3.4 Gb/s Data	E4887A-037
620Mb/s to 7Gb/s Clock	
Includes: 1xE4808A; 2x E4861B; 4x E4862B;	
1x E4809A; 1x N4874A; 1x E4875A;	
1x 81250A-149; 1x 81250A-013; 1x E4809A-001;	
1x 81250A-015	
Signal generator for jitter injection	
ESG Vector Signal Generator (1x)	E4438C
250 kHz to 6 GHz, requires option –UNJ	E4438C-506
250 kHz to 4 GHz, requires option -1E5	E4438C-504
Internal baseband generator	E4438C-601
Arbitrary Wavefrom Generator 20MHz (1x)	33220A
Frame generator software	
For TMDS Signal Generator E4887A-037	E4887A-207
Accessories and cables	
Accessory and cable kit for E4887A-037	E4887A-309
Includes: 2x N4912A; 5x N4871A; 3x 15442A;	
1x 1250-1744; 1x 11901C; 8x 83059B; 1x 8710-1582	
2x 1250-2015; 3x 1250-1698; 2x 1250-2206;	
CTS 1.3 low frequency cable emulator	E4887A-101
CTS 1.3 high frequency cable emulator	E4887A-102
Passive equalizer cable emulator (8pieces)	E4887A-103
HDMI test point access, plug	N1080A-H01
HDMI test point access, receptacle	N1080A-H02
HDMI Low Speed Board	N1080A-H03
BitifEye Digital Test Solutions (www.bitifeye.com):	
Bias Tee Kit for E4887A-037	BIT-HDMI-BTK-0037
Transition Time Converter Kit for E4887A-037	BIT-HDMI-TTC-0037
Test automation Cable Kit for E4887A-007/-037	BIT-HDMI-TAK-0737
Low Speed Kit for E4887A	BIT-HDMI-LSK-7373
Probe Power Distribution Kit for DSO80000 series oscilloscope	BIT-HDMI-PPD-7373
Snap-on Connector Kit (70 pc.)	BIT-GEN-SCK-0070
Network Connection Kit (8-port LAN switch and 5 LAN cable)	BIT-GEN-NCK-0001
DC-Power supply	
Dual output, 0-8V and 0-20V / 1.5A, 60W, GPIB	E3646A
Power Supply for 3.3V	E3600 series
LAN to GPIB converter	USB/GPIB Inteface
For HDMI compliance testing:	
Real-Time oscilloscope	DSO80000 or higher
Differential probes and probe heads	1169A (4x), N5380A (5x)
HDMI software package for DSO80000	N5399A
Test automation platform	N5990A-010
HDMI sink test	N5990A-150
Interface to N5399A HDMI software	N5990A-250

Recommended: Data base interface	N5990A-001

Economic high speed tester up to 3.4Gb/s

20.834 Mb/s to 3.4 Gb/s Data + Clock	E4887A-003
Includes: 1xE4808A; 3x E4861B; 5x E4862B; 1x E4875A; 1x 81250A-149; 1x 81250A-013; 1x 81250A-015; 1x E4809A-001	

Signal generator for jitter injection

Arbitrary Wavefrom Generator 20MHz (2x)	33220A

Frame generator software

For TMDS Signal Generator E4887A-003	E4887A-207

Accessories and cables

Accessory and cable kit for E4887A-003	E4887A-303
Includes: 5x N4871A; 3x 15442A; 8x 83059B; 1x 8710-1582; 1x 11636B; 3x 1250-2015; 3x 1250-1698; 2x 1250-2206	
CTS 1.3 low frequency cable emulator	E4887A-101
CTS 1.3 high frequency cable emulator	E4887A-102
Passive equalizer cable emulator (8pieces)	E4887A-103
HDMI test point access, plug	N1080A-H01
HDMI test point access, receptacle	N1080A-H02
HDMI Low Speed Board	N1080A-H03

BitifEye Digital Test Solutions (www.bitifeye.com):

Bias Tee Kit for E4887A-003	BIT-HDMI-BTK-0003
Transition Time Converter Kit for E4887A-003	BIT-HDMI-TTC-0003
Test Automation Cable Kit for E4887A-003	BIT-HDMI-TAK-0003
Low Speed Kit for E4887A	BIT-HDMI-LSK-7373
Probe Power Distribution Kit for DSO80000 series oscilloscopes	BIT-HDMI-PPD-7373
Snap-on Connector Kit (70 pc.)	BIT-GEN-SCK-0070
Network Connection Kit (8-port LAN switch and 5 LAN cable)	BIT-GEN-NCK-0001

DC-Power supply

Dual output, 0-8V and 0-20V / 1.5A, 60W, GPIB	E3646A
Power Supply for 3.3V	E3600 series
LAN to GPIB converter	USB/GPIB Interface

For HDMI compliance testing:

Real-Time oscilloscope	DSO80000
HDMI software package for DSO80000	N5399A
Test automation platform	N5990A-010
HDMI sink test	N5990A-150
Interface to N5399A HDMI software	N5990A-250
Recommended: Test automation data base interface	N5990A-001

Related Literature	Pub. No.
ParBERT 81250 Product Overview	5968-9188E
HDMI Jitter Tolerance Testing Application Note	5989-4959EN
Agilent Test Solutions for HDMI Brochure	5989-7169EN
E4438C ESG Vector Signal Generator Data Sheet	5988-4039EN
E364xA DC Power Supplies Data Sheet	5968-7355EN
N5990A Test Automation Software Data Sheet	5989-5483EN
Infiniium 8000 Series Oscilloscopes Data Sheet	5989-1487EN
N5399A HDMI Electrical Performance Software Data Sheet	5989-3047EN

www.agilent.com/find/hdmi_sink_test

For the latest version of this document, please visit our website at **www.agilent.com/find/hdmi_sink_test** and go to the Product Library.

Agilent Email Updates

www.agilent.com/find/emailupdates
Get the latest information on the products and applications you select.

Agilent Direct

www.agilent.com/find/agilentdirect
Quickly choose and use your test equipment solutions with confidence.

For more information on Agilent Technologies' products, applications or services, please contact your local Agilent office. The complete list is available at:

www.agilent.com/find/contactus

Americas

Canada	(877) 894-4414
Latin America	305 269 7500
United States	(800) 829-4444

Asia Pacific

Australia	1 800 629 485
China	800 810 0189
Hong Kong	800 938 693
India	1 800 112 929
Japan	0120 (421) 345
Korea	080 769 0800
Malaysia	1 800 888 848
Singapore	1 800 375 8100
Taiwan	0800 047 866
Thailand	1 800 226 008

Europe & Middle East

Austria	01 36027 71571
Belgium	32 (0) 2 404 93 40
Denmark	45 70 13 15 15
Finland	358 (0) 10 855 2100
France	0825 010 700*
	*0.125 €/minute
Germany	07031 464 6333
Ireland	1890 924 204
Israel	972-3-9288-504/544
Italy	39 02 92 60 8484
Netherlands	31 (0) 20 547 2111
Spain	34 (91) 631 3300
Sweden	0200-88 22 55
Switzerland	0800 80 53 53
United Kingdom	44 (0) 118 9276201

Other European Countries:
www.agilent.com/find/contactus
Revised: October 6, 2008

© Agilent Technologies, Inc. 2009
Printed in USA, June 12, 2009
5989-5537EN

Agilent Technologies