Agilent Handheld Tools

For Electronic, Electrical and Industrial Process Testing

- Digital multimeters
- Digital oscilloscopes
- Clamp meters
- Multifunction calibrator meter
- LCR meters
- Capacitance meters

Anticipate ___Accelerate ___Achieve

Agilent Technologies

Digital Multimeters

From electronics troubleshooting to installation and maintenance of machinery, Agilent handheld digital multimeters are designed to withstand the harsh working conditions and improve safety. Each DMM is compatible with the U1177A Infrared (IR)-to-*Bluetooth*® adapter which offers wireless remote connectivity solution. Our range of handheld DMMs are also equipped with smart features to help you quickly detect problems and obtain accurate measurements.

Recommended for	Electrical, HVAC and utilities			Installation and maintenance of machinery, electrical systems		Electronics troubleshooting			Industrial			
Model no.	U1231A	U1232A	U1233A	U1241B	U1242B	U1251B	U1252B	U1253B	U1271A	U1272A	U1273A	U1273AX
Display												
Display resolution (counts)	6,000	6,000	6,000	10,000	10,000	50,000	50,000	50,000	30,000	30,000	30,000	30,000
Dual display	N/A	N/A	N/A	N/A	N/A	Yes	Yes	Yes	Yes	Yes	Yes	Yes
Analog bar-graph	Yes	Yes	Yes	Yes	Yes	Yes	Yes	Yes	Yes	Yes	Yes	Yes
Back-light	Yes	Yes	Yes	Yes (two intensity levels)	Yes (two intensity levels)	Yes	Yes	OLED display	Yes	Yes	OLED display	OLED display
Basic features												
AC bandwidth	1 kHz	1 kHz	1 kHz	2 kHz	2 kHz	30 kHz	100 kHz	100 kHz	20 kHz	100 kHz	100 kHz	100 kHz
True RMS	AC	AC	AC	AC	AC	AC	AC + DC	AC + DC	AC	AC + DC	AC + DC	AC + DC
Auto/manual ranging	Yes	Yes	Yes	Yes	Yes	Yes	Yes	Yes	Yes	Yes	Yes	Yes
Measurements												
Voltage AC/DC: Range	600 mV to 600 V	600 mV to 600 V	600 mV to 600 V	1 V to 1000 V	1 V to 1000 V	50 mV to 1000 V	50 mV to 1000 V	50 mV to 1000 V	300 mV to 1000 V	30 mV to 1000 V	30 mV to 1000 V	30 mV to 1000 V
Current AC/DC: Range	N/A	60 µA to 10 A	60 µA to 10 A	1 mA to 10 A	1 mA to 10 A	500 µA to 10 A	500 µA to 10 A	500 µA to 10 A	300 µA to 10 A	300 µA to 10 A	300 µA to 10 A	300 µA to 10 A
Resistance: Range	600 Ω to 60 MΩ	600 Ω to 60 MΩ	600 Ω to 60 MΩ	1 kΩ to 100 MΩ	1 kΩ to 100 MΩ	500 Ω to 500 MΩ	500 Ω to 500 MΩ	500 Ω to 500 MΩ	300 Ω to 100 MΩ	30 Ω to 300 MΩ	30 Ω to 300 MΩ	30 Ω to 300 MΩ
Frequency: Range	99.99 Hz to 99.99 kHz	99.99 Hz to 99.99 kHz	99.99 Hz to 99.99 kHz	100 Hz to 1000 kHz	100 Hz to 1000 kHz	99.999 Hz to 999.99 kHz	99.999 Hz to 999.99 kHz	99.999 Hz to 999.99 kHz	99.999 Hz to 999.99 kHz	99.999 Hz to 999.99 kHz	99.999 Hz to 999.99 kHz	99.999 Hz to 999.99 kHz
Capacitance: Range	1000 nF to 10 mF	1000 nF to 10 mF	1000 nF to 10 mF	1 uF to 10 mF	1 uF to 10 mF	10 nF to 100 mF	10 nF to 100 mF	10 nF to 100 mF	10 nF to 10 mF	10 nF to 10 mF	10 nF to 10 mF	10 nF to 10 mF
Temperature: Type, range	N/A	N/A	K: –40 to 1372 °C	K: –40 to 1000 °C	K: –40 to 1000 °C J: –40 to 1000 °C	K: –200 to 1372 °C	K: –200 to 1372 °C J: –210 to 1200 °C	K: –200 to 1372 °C J: –210 to 1200 °C	K: –200 to 1372 °C	K: –200 to 1372 °C J: –210 to 1200 °C	K: –200 to 1372 °C J: –210 to 1200 °C	K: –200 to 1372 °C J: –210 to 1200 °C
Continuity with beeper	Yes	Yes	Yes	Yes	Yes	Yes	Yes	Yes	Yes	Yes	Yes	Yes
Diode test	Yes	Yes	Yes	Yes	Yes	Yes	Yes	Yes	Yes	Yes	Yes	Yes
Data management												
Min/max recording	Yes	Yes	Yes	Yes	Yes	Yes	Yes	Yes	Yes	Yes	Yes	Yes
Display hold	Yes	Yes	Yes	Yes	Yes	Yes	Yes	Yes	Yes	Yes	Yes	Yes
Peak hold	Yes	Yes	Yes	N/A	N/A	Yes	Yes	Yes	Yes	Yes	Yes	Yes
Manual datalogging	N/A	N/A	N/A	N/A	Yes	Yes	Yes	Yes	Yes	Yes	Yes	Yes
Null	Yes	Yes	Yes	Yes	Yes	Yes	Yes	Yes	Yes	Yes	Yes	Yes
Connectivity	IR-USB/ *Bluetooth*	IR-USB/ *Bluetooth*	IR-USB/ *Bluetooth*	IR-USB/ *Bluetooth*	IR-USB/ *Bluetooth*	IR-USB/ *Bluetooth*	IR-USB/ *Bluetooth*	IR-USB/ *Bluetooth*	IR-USB/ *Bluetooth*	IR-USB/ *Bluetooth*	IR-USB/ *Bluetooth*	IR-USB/ *Bluetooth*
% scale of 4-20 mA	N/A	N/A	N/A	Yes	Yes	Yes	Yes	Yes	Yes	Yes	Yes	Yes

Digital Multimeters *Continued*

Recommended for	Electrical, HVAC and utilities			Installation and maintenance of machinery, electrical systems		Electronics troubleshooting			Industrial			
Model no.	U1231A	U1232A	U1233A	U1241B	U1242B	U1251B	U1252B	U1253B	U1271A	U1272A	U1273A	U1273AX
General												
Operating temperature	–10 to 55 °C, 0% to 80% RH	–10 to 55 °C, 0% to 80% RH	–10 to 55 °C, 0% to 80% RH	–10 to 55 °C, 0 to 80% RH	–10 to 55 °C, 0 to 80% RH	–20 to 55 °C, 0 to 80% RH	–20 to 55 °C, 0 to 80% RH	–20 to 55 °C, 0 to 80% RH	–20 to 55 °C, 0 to 80% RH	–20 to 55 °C, 0 to 80% RH	–20 to 55 °C, 0 to 80% RH	–40 to 55 °C, 0 to 80% RH
Altitude	2000 m	2000 m	2000 m	2000 m	2000 m	2000 m	2000 m	2000 m	3000 m	3000 m	3000 m	3000 m
Measurement category	CAT III 600 V	CAT III 600 V	CAT III 600 V	CAT III 1000 V/ CAT IV 600 V	CAT III 1000 V/CAT IV 600 V	CAT III 1000 V/ CAT IV 600 V	CAT III 1000 V/ CAT IV 600 V	CAT III 1000 V/CAT IV 600 V	CAT III 1000 V/CAT IV 600 V	CAT III 1000 V/ CAT IV 600 V	CAT III 1000 V/ CAT IV 600 V	CAT III 1000 V/ CAT IV 600 V
Battery type (included)	4 x AAA alkaline	4 x AAA alkaline	4 x AAA alkaline	4 x AAA alkaline	4 x AAA alkaline	9 V	7.2 V (recharge-able)	7.2 V (recharge-able)	4 x AAA alkaline	4 x AAA alkaline	4 x AAA alkaline	4 x AAA lithium
Battery life	500 hours	500 hours	500 hours	300 hours	300 hours	72 hours	36 hours	8 hours	300 hours	300 hours	30-60 hours	50-100 hours
Dimensions (H x W x D)	169.0 x 86.0 x 52.0 mm	169.0 x 86.0 x 52.0 mm	169.0 x 86.0 x 52.0 mm	193.8 x 92.2 x 58.0 mm	193.8 x 92.2 x 58.0 mm	203.5 x 94.4 x 59.0 mm	203.5 x 94.4 x 59.0 mm	203.5 x 94.4 x 59.0 mm	207.0 x 92.0 x 59.0 mm	207.0 x 92.0 x 59.0 mm	207.0 x 92.0 x 59.0 mm	207.0 x 92.0 x 59.0 mm
Advanced functions	Built-in flashlight, continuity alert with flashing backlight, Z_{Low}	Built-in flashlight, continuity alert with flashing backlight, Z_{Low}	Built-in flashlight, non-contact voltage detector with Vsense, continuity alert with flashing backlight, Z_{Low}	Switch counter	Switch counter, har-monic ratio, dual and differential temperature mesure-ments	N/A	20 MHz frequency counter, pro-grammable square wave generator	Organic LED display, 20 MHz frequency counter, pro-grammable square wave generator	Low pass filter, AC and/or DC voltage check	Low pass filter, low impedance mode, offset compensa-tion	Low pass filter, low impedance mode, offset compensa-tion	Low pass filter, low impedance mode, offset compensa-tion

U1177A Infrared (IR)-to-*Bluetooth* Adapter

Agilent U1177A Infrared (IR)-to-*Bluetooth* adapter

Monitoring multiple measurements simultaneously and wirelessly is now made possible with the U1177A Infrared (IR)-to-*Bluetooth* adapter. To achieve this, simply install the free software on your Android smart phone or tablet, and connect it to any Agilent handheld digital multimeter (HH DMM) that is attached to a U1177A. With this, you not only get real-time measurement monitoring and data logging, both apply to Android devices and PCs as well.

Features

- Compatible with Agilent U1210 series handheld clamp meters and other handheld digital multimeters such as the U1230 series, U1240 series, U1250 series and U1270 series.
- Monitor up to 3 multimeter measurements at the same time with Agilent Mobile Meter software
- Perform data logging with Agilent Mobile Logger software

Web link

www.agilent.com/find/U1177A

Bluetooth and the *Bluetooth* logo are registered trademarks owned by *Bluetooth* SIG, Inc., U.S.A. and licensed to Agilent Technologies, Inc.

Agilent wireless remote connectivity solution

Clamp Meters

Our clamp meters are designed to address the toughest electrical challenges without compromising on safety. Certified with safety ratings and equipped with a wealth of features – you are now ready to make measurements with more confidence.

Recommended for	Installation and maintenance of power distribution and supplies			Commercial or residential electrical installation and maintenance			
Model no.	U1211A	U1212A	U1213A	U1191A	U1192A	U1193A	U1194A
Display							
Display resolution (counts)	4,000	4,000	4,000	6,000	6,000	6,000	6,000
Dual display	Yes	Yes	Yes	No	No	No	No
Analog bar-graph	Yes	Yes	Yes	No	No	No	No
Back-light	Yes	Yes	Yes	Yes	Yes	Yes	Yes
Basic features							
AC bandwidth	400 Hz	400 Hz	2 kHz	500 Hz	500 Hz	500 Hz	500 Hz
RMS Method	True RMS AC	AC	AC + DC	Average responding	Average responding	True RMS	True RMS
Auto/manual ranging	Yes	Yes	Yes	Auto ranging only	Auto ranging only	Auto ranging only	Auto ranging only
Measurements							
Voltage AC/DC: Range	400 to 1000 V	400 to 1000 V	4 V to 1000 V	600 V	60 to 600 V	60 to 600 V	60 to 600 V
Current AC/DC: Range	ACI: 40 to 1000 A	40 to 1000 A	40 to 1000 A	ACI: 400 A	ACI: 60 to 400 A	ACI: 60 to 600 A	ACI: 60 µA to 600 A DCI: 60 µA to 600 A
Resistance: Range	400 Ω to 4 kΩ	400 Ω to 4 kΩ	400 Ω to 40 MΩ	600 Ω to 6 kΩ	600 Ω to 60 kΩ	600 Ω to 60 kΩ	600 Ω to 60 kΩ
Frequency: Range	99.99 Hz to 999.9 kHz	99.99 Hz to 999.9 kHz	99.99 Hz to 999.9 kHz	N/A	99.99 Hz to 99.99 kHz	99.99 Hz to 99.99 kHz	99.99 Hz to 99.99 kHz
Capacitance: Range	400 to 4000 µF	400 to 4000 µF	4 to 4000 µF	N/A	600 µF to 6 mF	600 µF to 6 mF	600 µF to 6 mF
Temperature: Type, range	N/A	K: –200 to 1372 °C	K: –200 to 1372 °C	N/A	N/A	N/A	K-type: –40 to 1200 °C
Continuity with beeper	Yes	Yes	Yes	Yes	Yes	Yes	Yes
Diode test	Yes	Yes	Yes	Yes	Yes	Yes	Yes
Data management							
Min/max recording	Yes	Yes	Yes	Yes	Yes	Yes	Yes
Display hold	Yes	Yes	Yes	Yes	Yes	Yes	Yes
Peak hold	Yes	Yes	Yes	N/A	N/A	N/A	N/A
Null	Yes	Yes	Yes	Yes	Yes	Yes	Yes
Connectivity	*Bluetooth*	*Bluetooth*	*Bluetooth*	N/A	N/A	N/A	N/A
General							
Operating temperature	–10 to 50 °C, 0 to 80% RH	–10 to 50 °C, 0 to 80% RH	–10 to 50 °C, 0 to 80% RH	–10 to 50 °C, 0 to 80% RH	–10 to 50 °C, 0 to 80% RH	–10 to 50 °C, 0 to 80% RH	–10 to 50 °C, 0 to 80% RH
Measurement category	CAT III 1000 V / CAT IV 600 V	CAT III 1000 V / CAT IV 600 V	CAT III 1000 V / CAT IV 600 V	CAT III 600 V / CAT IV 300 V	CAT III 600 V / CAT IV 300 V	CAT III 600 V / CAT IV 300 V	CAT III 600 V / CAT IV 300 V
Battery type (included)	9 V	9 V	9 V	1.5 V	1.5 V	1.5 V	1.5 V
Battery life	60 hours	60 hours	60 hours	200 hours	200 hours	200 hours	200 hours
Dimensions (H x W x D)	273.0 x 106.0 x 43.0 mm	273.0 x 106.0 x 43.0 mm	273.0 x 106.0 x 43.0 mm	225.0 x 77.1 x 38.6 mm	225.0 x 77.1 x 38.6 mm	238.0 x 77.1 x 38.6 mm	238.0 x 77.1 x 38.6 mm
Clamp opening	52 mm / 2 "	52 mm / 2 "	52 mm / 2 "	31 mm	31 mm	37 mm	37 mm
Advanced functions	Auto power off	Auto power off	Auto power off	Wire separator, Auto power off	Wire separator, built-in flashlight, Vsense, Auto power off	Wire separator, built-in flashlight, Vsense, Auto power off	Wire separator, built-in flashlight, Vsense, Auto power off

Oscilloscopes

Our handheld scopes are designed to be used across a wide range of applications and troubleshooting tasks. Each model come with different specifications to tailor to your needs, and are safety certified for safer measurements.

Model No.	U1602B	U1604B	U1610A	U1620A
Vertical System: Scope Channels				
Bandwidth (-3 dB)	20 MHz	40 MHz	100 MHz	200 MHz
DC vertical gain accuracy	5 mV/div to 20 mV/div: ± 5% full scale 50 mV/div to 100 V/div: ± 3% full scale		±2% of full scale Full scale is equivalent to 8 div	
Acquisition: Scope Channels				
Maximum sample rate Single Channel Operation Dual Channel Operation	200 MSa/s interleave 100 MSa/s each channel		1 GSa/s interleave 500 MSa/s each channel	2 GSa/s interleave 1 GSa/s each channel
Vertical resolution	8-bits		8-bits	
Maximum recording length Single Channel Operation Dual Channel Operation	125 Kpts	125 Kpts	120 Kpts interleave 60 Kpts each channel	2 Mpts interleave 1 Mpts each channel
Vertical System: Scope Channels				
Rise time	<17.5 ns	<8.8 ns	3.50 ns typical	1.75 ns typical
Maximum input	CAT III 300 Vrms (up to 400 Hz) from terminal to ground		CAT III 600 Vrms (with 10:1 probe) CAT III 300 Vrms (direct / 1:1 probe)	
Bandwith limit	N/A		10 KHz and 20 MHz (selectable)	
Channel-to-channel isolation	N/A		Yes, CAT III 600 V Vrms	
Probe attentuation factors	1x, 10x, 100x		1x, 10x, 100x	
Horizontal System				
Range	50 ns to 50 s/div	10 ns to 50 s/div	5 ns/div to 50 s/div	2 ns/div to 50 s/div
Modes	Main, XY, roll		Main, zoom, XY, roll	
Trigger system				
Sources	Channel 1 and Channel 2		Channel 1, Channel 2, External	
Modes	Auto, normal, single		Normal, Single, Auto	
Types	Edge, Pattern, Pulse Width, Video		Edge, Glitch, TV, Nth Edge, CAN, LIN	
Auto measurements	Peak-to-peak, maximum, minimum, amplitude, top, base, +overshoot, –overshoot, preshoot, RMS, mean and one cycle mean, Frequency, period, +width, – width, and +duty cycle and –duty cycle on any channel. Rise time, fall time, delay and phase shift		Delay, duty cycle (+/–), fall/rise time, frequency, period, phase shift, T-max, T-min, width (+/–), amplitude, average, base, crest, cycle mean, maximum, minimum, overshoot, peak-to-peak, preshoot, standard deviation, top, Vrms (AC/DC), active/apparent/reactive power, power factor	
Waveform math functions	CH1 + CH2, CH1 – CH2, CH2 – CH1		CH1 + CH2, CH1 – CH2, CH2 – CH1, CH1 × CH2, CH1/CH2, CH2/CH1, d/dt (CH1), d/dt (CH2), ∫(CH1)dt, ∫(CH2)dt, FFT	
Digital Multimeter measurement				
Voltage AC/DC range	600 mV to 600 V		1000 mV to 1000 V	
Resistance range	600 Ω to 60 MΩ		1000 Ω to 100 MΩ	
Capacitance range	60 nF to 300 uF		1000 nF to 10 mF	
Diode range	1 V		1 V	
Temperature range	600 °C		–50 to 1000 °C	
Frequency	N/A		100 Hz to 1000 KHz	
AC Current range	60 A		N/A	
Measurement characteristic				
Resolution	6,000 counts		10,000 counts	
Continuity	Beeper < 60 W in 600 W range		Continuous beep when resistance <10 Ω	
Datalogger	Yes		Yes	

Oscilloscopes *Continued*

Model No.	U1602B	U1604B	U1610A	U1620A
General				
Display	4.5" diagonal color		5.7" VGA TFT Color LCD (sunlight viewable)	
Resolution	320 x 240 pixels		640 x 480 pixels	
IP rating	N/A		IP41	
Save/Recall	Up to 10 setups and traces		10 setups and waveforms can be saved and recalled internally	
Battery type	Ni-MH rechargeable battery pack 7.2 V		Li-Ion rechargeable battery pack, 10.8 V	
Battery life	4 hours		3 hours	
I/O	USB 2.0 full speed client		USB 2.0 full speed host/client port	
Dimension (H x W x D)	241 x 138 x 66 mm		183 x 270 x 65 mm	
Weight	1.5 kg		<2.5 kg	
UI language	10 selectable languages		10 selectable languages	
Advanced functions	CSTN LCD screen		3 viewing modes (indoor, outdoor, night-vision), VGA TFT LCD screen, dual windows zoom	

U1230 Series – Handheld Digital Multimeters

Whether it is dark, noisy or even dangerous, the U1230 Series Handheld digital multimeter keeps you equipped with features that anticipate worst-case scenarios. The ergonomic shaped handheld allows you to single-handedly illuminate the test area with a built-in flashlight while selecting measurement functions using the rotary dial. Vsense performs non-contact voltage detection while continuity detection is made easy with the audible beeper alert and flashing backlight display. With the U1230 Series, you work better in the conditions you are in.

Features

- Built-in LED flashlight to illuminate test area
- Flashing backlight as additional visual alert during continuity tests in noisy areas
- Vsense performs non-contact voltage detection
- Data logging capability (stores up to 10 readings)
- IR-to-USB connectivity to transfer data to PC for record
- *Bluetooth* wireless connectivity (optional U1177A Infrared (IR)-to-*Bluetooth* Adapter required)

Applications with U1230 Series Handheld Digital Multimeters

In an electrical or industrial work setting, making measurements during power failures or in a poorly lit environment can be a common occurrence.

Working in a dark environment can be cumbersome; you may need to carry multiple test tools- and a flashlight. This is why the U1230 Series is well-designed with a set of features that enable electricians to work better in these environments.

The U1230 Series now comes with a built-in flashlight, allowing electricians to single-handedly illuminate the test area while troubleshooting circuits in cramped or dark areas. The flashlight is also easily activated with a one push button, allowing measurements and troubleshooting tasks to be performed more efficiently.

The U1230 Series also performs continuity test with a unique combination of beeper alert and flashing backlight display. The flashing backlight display serves as an additional visual alert to the electrician, when performing measurement in a noisy or dim place. Both of these alerts occur simultaneously making them hard-to-miss, thus allowing continuity tests to be performed quicker and easier.

Performing electrical measurements in a poorly lit or noisy environment can be potentially hazardous. The U1233A handheld digital multimeter comes with Vsense which performs non-contact detection of live voltages. With Vsense, electricians can now perform their tasks more safely by avoiding hot or live voltages. Upon the detection of live voltages, it simultaneously produces a unique combination of two alerts; audible beep alert and blinking LED light.

Specifications of the U1230 Series Digital Multimeters

		U1231A	U1232A	U1233A
Basic features				
Display resolution		6,000	6,000	6,000
Auto/manual ranging		Yes	Yes	Yes
Analog bar graph		Yes	Yes	Yes
Backlight		Yes	Yes	Yes
AC bandwidth		45 Hz to 1 kHz	45 Hz to 1 kHz	45 Hz to 1 kHz
True RMS		Yes	Yes	Yes
Measurements				
Voltage DC	Range	600 mV to 600 V	600 mV to 600 V	600 mV to 600 V
	Accuracy	0.5% + 2 cnts	0.5% + 2 cnts	0.5% + 2 cnts
Voltage AC	Range	600 mV to 600 V	600 mV to 600 V	600 mV to 600 V
	Accuracy	1.0% + 3 cnts	1.0% + 3 cnts	1.0% + 3 cnts
	Bandwidth	45 Hz to 1 kHz	45 Hz to 1 kHz	45 Hz to 1 kHz
Current DC	Range	N/A	60 µA to 10 A	60 µA to 10 A
	Accuracy		1.0% + 2 cnts	1.0% + 2 cnts
Current AC	Range	N/A	60 µA to 10 A	60 µA to 10 A
	Accuracy		1.5% + 3 cnts	1.5% + 3 cnts
	Bandwidth		45 to 500 Hz	45 to 500 Hz
Resistance	Range	600 Ω to 60 MΩ	600 Ω to 60 MΩ	600 Ω to 60 MΩ
	Accuracy	0.9% + 3 cnts	0.9% + 3 cnts	0.9% + 3 cnts
Frequency	Range	99.99 Hz to 99.99 kHz	99.99 Hz to 99.99 kHz	99.99 Hz to 99.99 kHz
	Accuracy	0.1% + 2 cnts	0.1% + 2 cnts	0.1% + 2 cnts
Capacitance	Range	1000 nF to 10 mF	1000 nF to 10 mF	1000 nF to 10 mF
	Accuracy	1.9% + 2 cnts	1.9% + 2 cnts	1.9% + 2 cnts
Temperature	Range	N/A	N/A	–40 to 1372 °C
	Accuracy			1% + 1 °C
Diode test		Yes	Yes	Yes
Data management				
Min/max recording		Yes	Yes	Yes
Trigger hold		Yes	Yes	Yes
Auto hold		Yes	Yes	Yes
Manual datalogging		N/A	N/A	N/A
Null		Yes	Yes	Yes
Connectivity		IR-USB/*Bluetooth*	IR-USB/*Bluetooth*	IR-USB/*Bluetooth*
% scale of 4-20 mA		N/A	N/A	N/A
Special features				
Built-in flashlight		Yes ★	Yes ★	Yes ★
Beep + backlight alert for continuity		Yes ★	Yes ★	Yes ★
Vsense for non-contact voltage detection		N/A	N/A	Yes ★
Z_{LOW}- low impedance mode		Yes	Yes	Yes
Safety and regulatory				
IP rating		IP 42	IP 42	IP 42
Over-voltage safety protection		CAT III 600 V	CAT III 600 V	CAT III 600 V
EN/IEC 610101-1:2001 compliance		Yes	Yes	Yes
CSA C22.2 No. 61010-1:2004 compliance		Yes	Yes	Yes

★ represents key specifications/feature

Specifications of the U1230 Series Digital Multimeters *Continued*

	U1231A	U1232A	U1233A
General			
Operating temperature	–10 to 55 °C, 0% to 80% RH	–10 to 55 °C, 0% to 80% RH	–10 to 55 °C, 0% to 80% RH
Battery (included)	4 x 1.5 V Alkaline battery	4 x 1.5 V Alkaline battery	4 x 1.5 V Alkaline battery
Battery life	500 hours	500 hours	500 hours
Warranty	3 years	3 years	3 years
Dimensions (H x W x D)	169 × 86 × 52 mm	169 × 86 × 52 mm	169 × 86 × 52 mm

Web link
www.agilent.com/find/U1230DMM

For complete specifications, please refer to data sheet 5990-7550EN

How to?

Select a Handheld DMM that is Right for You
http://cp.literature.agilent.com/litweb/pdf/5990-5197EN.pdf

Think Safety When Selecting a Handheld Multimeter
http://cp.literature.agilent.com/litweb/pdf/5990-4578EN.pdf

U1240 Series - Handheld Digital Multimeters

Installation and maintenance of machinery, electrical systems and more often require numerous quick checks and fixes, sometimes under hazardous conditions. Whether you need to quickly inspect power supplies for harmonics, detect glitches in switch systems or monitor differential temperature, the U1240 Series of handheld digital multimeters (DMMs) is up to the task. With all you need in one portable instrument, you can travel light and finish the day's work with ease. Plus, you'll be glad to know it's easy to own one, even with the DMM's rich capabilities.

Features

- Low micro-amp and high Mega-ohm ranges
- Switch/Relay counter for glitch detection
- Harmonic ratio measurement in AC supplies
- Dual and differential temperature measurements
- Data logging to instrument on the go
- Bluetooth® wireless connectivity
  (optional U1177A Infrared (IR)-to-Bluetooth Adapter required)

Applications with U1240 Series Handheld Digital Multimeters

Harmonic ratio measurement for maintenance of facilities, motors, generators and transformers

Any periodic waveform other than an absolutely pure sine wave has some amount of harmonic content. If these unwanted multiples of the fundamental frequency become too large, they have unwanted side effects: overheating that shortens the lifespan of motors, generators and transformers; premature tripping of circuit breakers; and blown fuses.

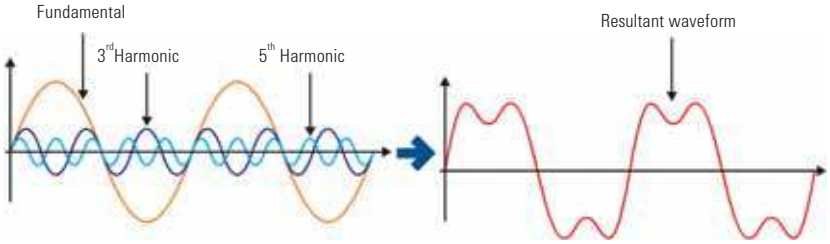

When harmonics are present, the shape of an original sinusoidal waveform becomes distorted, producing a non-zero harmonic ratio.

Regular maintenance with an accurate, dependable DMM ensures early detection of harmonics in the AC supply. One of the quickest ways to detect and gauge the percentage of distortion due to harmonics is to measure the harmonic ratio of the incoming AC voltage.

The U1240 Series offers a fast one-button check with its harmonic ratio function. The ratio percentage helps you decide if further analysis of the power source is necessary with an oscilloscope or a spectrum analyzer.

Harmonic ratio $\frac{V_{rms} - V_{avg}}{V_{rms}} \times 100\%$

		V_{rms}	V_{avg}
Measuring circuit		RMS-calculating converter calculates heating value	Multiplies rectified average by 1.1
Response to sine wave		Correct	Correct
Response to square wave		Correct	10% high
Response to distorted wave		Correct	Up to 50% low

Switch counter for detection of glitches on switch and relay systems

Careful maintenance of the switches and relays used in facilities and machinery helps ensure that they're operating as expected in their OPEN or CLOSED settings. You can check their performance with just one button using the U1240 Series' switch counter function. This function detects intermittent OPEN or CLOSED occurrences across relay/switch contacts in the reversed setting. The total count indicates the extent of relay/switch faults and determines if further troubleshooting is necessary.

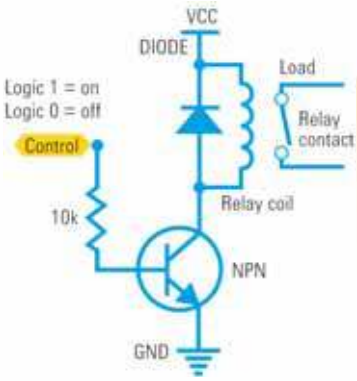

Dual and differential temperature for efficient testing of HVAC systems

Whether you're installing, maintaining or troubleshooting heating, ventilation and air-conditioning (HVAC) systems in cars, offices, factories, stores or homes, temperature measurements are crucial. For example, to ensure boiler temperature meets safety requirements, you'd have to measure boiler and air temperature simultaneously to get accurate real-time readings. With a faulty air conditioning system, viewing the temperature difference between warm return air and cool supply air helps reveal the cooling behavior of the evaporator with respect to time. With the U1240 Series, you need just one instrument for convenient, efficient dual and differential temperature measurements.

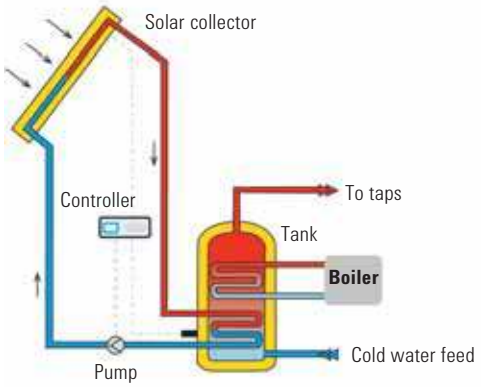

Solar heating system

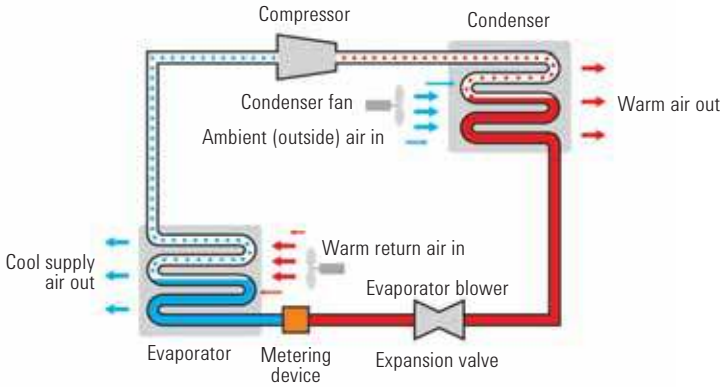

Air-conditioning system

Specifications of the U1240 Series Digital Multimeters

	U1241B	U1242B
Display		
Counts	10,000 ★	10,000 ★
Analog bar graph	Yes	Yes
Backlight	Dual-intensity ★	Dual-intensity ★
Back features		
True RMS	AC	AC
Basic DCV accuracy	0.09%	0.09%
Auto/manual ranging	Yes	Yes
Measurements		
Voltage AC/DC	1000 V	1000 V
Current AC/DC	10 A (down to microamps) ★	10 A (down to microamps) ★
Resistance	100 MΩ	100 MΩ
Frequency	200 kHz	200 kHz
Capacitance	0.1 nF to 10 mF ★	0.1 nF to 10 mF ★
Temperature	1000 °C, K-type thermocouple	1000 °C, K-type thermocouple, T1/T2/T1-T2 ★
Continuity with beeper	Yes	Yes
Diode test	Yes	Yes
4-20 mA % scale	Yes	Yes
Harmonic ratio	N/A	Yes ★
Switch counter	Yes ★	Yes ★
Data management		
Min/Max/Avg recording	Yes	Yes
Data hold	Yes	Yes
Null	Yes	Yes
Connectivity	IR-USB/*Bluetooth*	IR-USB/*Bluetooth*
Data logging	N/A	100 manual, 200 interval points

★ represents key specifications/features

Specifications of the U1240 Series Digital Multimeters *Continued*

	U1241B	U1242B
Safety and regulatory		
Over-voltage safety protection	CAT III 1000 V/CAT IV 600 V	CAT III 1000 V/CAT IV 600 V
EN/IEC 61010-1:2001 compliance	Yes	Yes
CSA C22.2 No. 61010-1:2004 compliance	Yes	Yes
General		
Operating temperature	–10 to 55 °C	–10 to 55 °C
Battery (included)	4 x AAA	4 x AAA
Battery life	300 hours	300 hours
Warranty	3 years	3 years
Dimensions (H x W x D)	193.8 x 92.2 x 58.0 mm	193.8 x 92.2 x 58.0 mm ★

★ represents key specifications/features

For complete specifications, please refer to data sheet 5989-7040EN

Web link
www.agilent.com/find/handhelddmm

How to ?
Detect Harmonics in AC signals
http://cp.literature.agilent.com/litweb/pdf/5989-7687EN.pdf

Select a Handheld DMM that is Right for You
http://cp.literature.agilent.com/litweb/pdf/5990-5197EN.pdf

U1250 Series - Handheld Digital Multimeters

The process of isolating faults is always unpredictable—so it's good to be equipped with a versatile DMM that simplifies analysis, accelerates glitch detection and makes it easier to probe hard-to-reach points. The U1250 Series gets even better with the U1253B DMM and its razor-sharp OLED display: You'll get crystal-clear readings indoors, even in dark, off-angle situations. Optimize electronics trouble-shooting with the accuracy, capabilities, and accessories you need to get started in no time.

Features

- High contrast ratio of 2000:1 and wide viewing angle of 160°*
- 50,000 counts high resolution and up to 0.025% low error rate
- Built-in square-wave generator and frequency counter
- Includes all essential accessories for electronics troubleshooting
- Smoothing function to stabilize erratic readings*
- Data logging to instrument and PC
- *Bluetooth* wireless connectivity (optional U1177A Infrared (IR)-to-*Bluetooth* Adapter required)

* with U1253B

A testament to innovation and credibility, 2006

Best Value Portable Test Equipment, 2006

General-purpose instruments category, 2009

Category Winner, EC&M Product of the Year competition, 2009

Applications with the U1250 Series Handheld Digital Multimeters

Automated data logging to PC for long, continuous measurements

Qualification and troubleshooting of a device-under-test (DUT) often require long periods of testing, over either different temperatures or parameter settings. A common test would be voltage measurements at room, hot and cold temperatures. In such cases, it's more convenient and efficient to automate recording of measurements while you perform other tasks that are at hand. It's even better if you can record as many data points as required without worrying about the storage capacity of the measuring equipment.

Whatever your measurements, the U1250 Series lets you make easy automated data logging with virtually unlimited saves to PC—so you can be assured that faults are recorded dependably and analyzed sooner.

Event logging setup in minutes—with bundled GUI data-logging software

1. Connect the optional U1173A IR-USB cable to your U1250 Series DMM and PC

2. Open up the GUI data-logging interface
3. Click on Connect Meter
4. Click on Datalogging and then ▶ to start data logging

Data viewable in both graphical and tabular formats

What others say

"I can view rapidly changing readings easily with the U1252A's speedy update rate. Its stable voltage/current/resistance readings offer accurate results, particularly for microvolt measurements of load cells."

James G. DuPuy, Service Engineer, Brechbuler Scales Inc. manufacturer of industrial weighing systems and scales

Built-in square-wave generator for designing and troubleshooting motor drivers

In the motor-driver circuit shown, a signal from the pulse-width modulation (PWM) inverter drives the motor and is fed back to the speed controller circuit. In design and troubleshooting applications, these pulses are generated externally—usually with a function generator or pulse generator—and injected into the circuit to simulate actual pulses from the inverter.

With the U1250 Series, you can easily configure the square-wave output of the U1252B to generate simple PWM signals—conveniently in one portable, lightweight instrument.

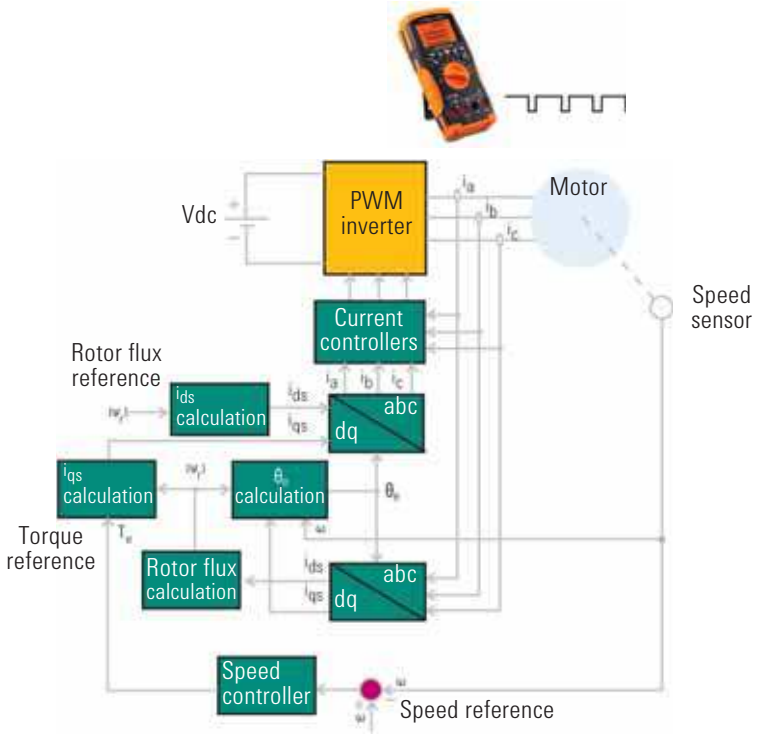

What others say

"We used square-wave output from the DMM for operational checks of digital circuits around an FPGA to verify the power source of a satellite tracking device and the reception signal from GPS. The U1252A makes our job easier by providing multiple measurements and very accurate results."

Hashiguchi, Engineer, ELM Inc., Japan – developer of satellite tracking and other system devices

Specifications of the U1250 Series Digital Multimeters

	U1251B	U1252B	U1253B
Display			
Organic LED	N/A	N/A	Yes ★
Dual display	Yes	Yes	Yes
Counts	50,000 (both displays) ★	50,000 (both displays) ★	50,000 (both displays) ★
Analog bar graph	Yes	Yes	Yes
Backlight	Yes	Yes	N/A
Basic features			
True RMS	AC	AC+DC	AC+DC
Basic DCV accuracy	0.03%	0.025%	0.025%
Auto/Manual ranging	Yes	Yes	Yes
Measurements			
Voltage AC/DC	1000 V	1000 V	1000 V
Current AC/DC	10 A	10 A	10 A
Resistance	50 MΩ	500 MΩ	500 MΩ
Frequency	1 MHz	20 MHz	20 MHz
Capacitance	0.001 nF to 100 mF	0.001 nF to 100 mF ★	0.001 nF to 100 mF ★
Temperature	1372 °C, K-type thermocouple ★	1372 °C, J/K-type thermocouple ★	1372 °C, J/K-type thermocouple ★
Continuity with beeper	Yes	Yes	Yes
Diode test	Yes	Yes	Yes
4-20 mA % scale	Yes	Yes	Yes
dB	Yes	Yes	Yes
Frequency counter	N/A	Yes ★	Yes ★
Smoothing function	N/A	N/A	Yes ★

★ represents key specifications/features

Specifications of the U1250 Series Digital Multimeters *Continued*

	U1251B	U1252B	U1253B
Signal generation			
Square-wave generator	N/A	0.5 Hz to 4.8 kHz, selectable Hz and % ★	0.5 Hz to 4.8 kHz, selectable Hz and % ★
Data management			
Min/Max/Avg recording	Yes	Yes	Yes
Peak recording	Yes	Yes	Yes
Data hold	Yes	Yes	Yes
Null	Yes	Yes	Yes
Connectivity	IR-USB/*Bluetooth*	IR-USB/*Bluetooth*	IR-USB/*Bluetooth*
Data logging (requires IR-to-USB cable U1173A for connection to PC)	Internal: 100 manual, 200 interval points To PC: virtually unlimited ★	Internal: 100 manual, 200 interval points To PC: virtually unlimited ★	Internal: 100 manual, 1000 interval points To PC: virtually unlimited ★
Safety and regulatory			
Over-voltage safety protection	CAT III 1000 V/CAT IV 600 V	CAT III 1000 V/CAT IV 600 V	CAT III 1000 V/CAT IV 600 V
EN/IEC 61010-1:2001 compliance	Yes	Yes	Yes
CSA C22.2 No. 61010-1:2004 compliance	Yes	Yes	Yes
General			
Operating temperature	–20 to 50 °C	–20 to 50 °C ★	–20 to 50 °C ★
Battery (included)	Alkaline 9 V	7.2 V Ni-MH rechargeable	7.2 V Ni-MH rechargeable
Battery life	72 hours	36 hours	8 hours
I/O	IR-USB	IR-USB	IR-USB
Warranty	3 years	3 years	3 years
Dimensions (H x W x D)	203.5 x 94.4 x 59.0 mm	203.5 x 94.4 x 59.0 mm	203.5 x 94.4 x 59.0 mm

★ represents key specifications/features

For complete specifications, please refer to data sheet 5989-5509EN

Web link
www.agilent.com/find/handhelddmm

How to ?

Get the Best Out of the U1250 Series Handheld DMM
http://cp.literature.agilent.com/litweb/pdf/5989-7937EN.pdf

Think Safety When Selecting a Handheld Multimeter
http://cp.literature.agilent.com/litweb/pdf/5990-4578EN.pdf

Select a Handheld DMM That is Right for You
http://cp.literature.agilent.com/litweb/pdf/5990-5197EN.pdf

U1270 Series – Handheld Digital Multimeters

The U1273AX, the latest addition to the U1270 series is capable of operating down to -40°C in temperature. Even in extremely cold conditions, the U1273AX handheld DMM delivers immediate and accurate results—no warm-up time required.

All models are ergonomically-built providing useful functions such as Z_{LOW}, which eliminates stray voltages, and Smart Ohm that minimizes false readings from residual voltage induced by leakage current. All of this is designed into a case that fulfills the needs of today's industrial handheld users.

Features

- OLED display with 2000:1 contrast ratio and 160 degree viewing angle [1,2]
- 30,000 counts resolution
- Measure up to 1000 V AC and DC
- Measure up to 10 A (20 A for 30 s)
- Resistance, diode test, temperature, capacitance
- Low Impedance mode [1,2,3] and Low Pass Filter
- –40 to 55 °C operating temperature [2]
- Up to 3000 m operating altitude
- Data logging to instrument and PC
- Water and dust resistance (IP 54)
- CAT III 1000 V / CAT IV 600 V safety rating
- *Bluetooth* wireless connectivity with optional U1177A *Bluetooth*

1. U1273A 2. U1273AX 3. U1272A

Applications with U1270 Series Handheld Digital Multimeters

Key functions

Low Pass Filter (LPF)

In alternating current (AC) electric motor related applications such as the temperature control system in chiller rooms or conveyor drives, the efficiency of the motor is very important to reduce operating costs and improve productivity. Therefore, technicians need to perform routine servicing and repairs on the motors and variable-frequency drive (VFD). The VFD is especially important as it controls the rotational speed of the electric motor by regulating the frequency of the electrical power supplied to the motor.

Sometimes, a maintenance check on the motor and VFD reveals that the actual output voltage and frequency from the VFD differs from the readings on the VFD display. This shows that the VFD might be faulty and may therefore need replacement or repair. The difference in voltage readings could also be contributed by harmonics produced by the output of the VFD. This problem must be addressed quickly because if this situation prolongs, the motor may overheat and eventually fail, causing downtime.

It is difficult to identify the root cause of this error using a typical wide bandwidth handheld digital multimeter (DMM). A handheld multimeter with a built-in low pass filter would help technicians to quickly determine if the problem is contributed by unwanted high frequency components generated by the VFD. The Agilent U1270 Series handheld DMMs offer a 1 kHz low pass filter to provide accurate VFD output measurement. This function eliminates unwanted high frequency noise signals and components generated by the VFD. Therefore, a technician would be able to reduce troubleshooting time and ultimately reduce system downtime.

Comparison of voltage output from industrial motor VFD without and with Low Pass Filter functionality.

Low impedance mode (Z_{LOW})

Electrical conduit is commonly found in buildings, from manufacturing plants to residential homes. It provides enclosed conductors protection from moisture, chemical vapors and impact. The use of electrical conduit simplifies wiring changes as existing conductors can be withdrawn and new conductors installed with little disruption along the path of the conduit.

Although convenient and safe, unused wires can sometimes run parallel with energized wiring. This may induce capacitive coupling between these wires, causing an undesirable transfer of energy from the energized wiring to the unused wiring. This complicates installation or maintenance of electrical wiring as voltage may be detected on the unused wiring. This is known as 'stray voltage'. This causes complications for technicians, who would have to spend time troubleshooting or isolating wires in order to determine the source of the voltage.

Multimeters with a low impedance mode are able to identify the presence of stray voltages in non-energized wiring. The low impedance mode eliminates false readings by providing a load to the circuit during voltage testing.

The Agilent U1272A/U1273A are dual impedance digital multimeters, offering both high and low impedance modes. The DMM's high impedance function can be used in most electrical measurements in the industrial environment because it will not load the circuit under test. Switching to the low impedance mode allows the U1272A/U1273A to perform accurate measurements on circuits that may contain stray voltages. This eliminates the need of an additional low impedance multimeter, such as a solenoid tester. If this mode is used when real voltage is present, the Agilent U1272A/U1273A has a built-in positive temperature coefficient (PTC) thermistor as an overcurrent protection element.

Smart Ω

In integrated circuit (IC) manufacturing plants, ground continuity measurements on workstations are important to ensure that electrostatic discharge (ESD) is minimized. As electronic components become further miniaturized, these components are more sensitive to ESD. In order to maintain a workstation, the common ground point for continuity to earth or electrical ground should be checked periodically.

During this continuity check, leakage current may be found flowing through the common ground conductor to earth ground. This leakage current causes inaccurate ground continuity measurement.

The Agilent U1272A/U1273A handheld digital multimeters (DMM) allow you to read the leakage current with its Smart Ω function. With the U1272A/U1273A's dual display and 30 Ohms range, you can obtain accurate resistance measurement and read leakage current simultaneously.

Specifications of the U1270 Series Digital Multimeters

		U1271A	U1272A	U1273A	U1273AX
Basic features					
Display resolution		30,000	30,000	30,000	30,000
Display type		LCD	LCD	OLED	OLED
Auto/manual ranging		Yes	Yes	Yes	Yes
Analog bar graph		Yes	Yes	Yes	Yes
Backlight		Yes	Yes	Yes	Yes
AC bandwidth		20 kHz	100 kHz	100 kHz	100 kHz
True RMS		AC	AC + DC	AC + DC	AC + DC
Measurements					
Voltage DC	Range Accuracy	300 mV to 1000 V 0.05% + 2 cnts	30 mV to 1000 V 0.05% + 2 cnts	30 mV to 1000 V 0.05% + 2 cnts	30 mV to 1000 V 0.05% + 2 cnts
Voltage AC	Range Accuracy Bandwidth	300 mV to 1000 V 0.7% + 20 cnts 45 Hz to 20 kHz	30 mV to 1000 V 0.6% + 20 cnts 45 Hz to 100 kHz	30 mV to 1000 V 0.6% + 20 cnts 45 Hz to 100 kHz	30 mV to 1000 V 0.6% + 20 cnts 45 Hz to 100 kHz
Current DC	Range Accuracy	300 µA to 10 A 0.2% + 5 cnts	300 µA to 10 A 0.2% + 5 cnts	300 µA to 10 A 0.2% + 5 cnts	300 µA to 10 A 0.2% + 5 cnts
Current AC	Range Accuracy Bandwidth	300 µA to 10 A 0.9% + 25 cnts 45 Hz to 2 kHz	300 µA to 10 A 0.6% + 25 cnts 45 Hz to 2 kHz	300 µA to 10 A 0.6% + 25 cnts 45 Hz to 2 kHz	300 µA to 10 A 0.6% + 25 cnts 45 Hz to 2 kHz
Resistance	Range Accuracy	300 Ω to 100 MΩ 0.2 % + 5 cnts	30 Ω to 300 MΩ 0.2% + 5 cnts	30 Ω to 300 MΩ 0.2% + 5 cnts	30 Ω to 300 MΩ 0.2% + 5 cnts
Frequency	Range Accuracy	99.999 Hz to 999.99 kHz 0.005% + 5 cnts	99.999 Hz to 999.99 kHz 0.005% + 5 cnts	99.999 Hz to 999.99 kHz 0.005% + 5 cnts	99.999 Hz to 999.99 kHz 0.005% + 5 cnts

Specifications of the U1270 Series Digital Multimeters *Continued*

		U1271A	U1272A	U1273A	U1273AX
Measurements *Continued*					
Capacitance	Range Accuracy	10 nF to 10 mF 1% + 2 cnts	10 nF to 10 mF 1% + 2 cnts	10 nF to 10 mF 1% + 2 cnts	10 nF to 10 mF 1% + 2 cnts
Temperature	Range Accuracy	K: –200 to 1372 °C 1% + 1 °C	K: –200 to 1372 °C J: –210 to 1200 °C 1% + 1 °C	K: –200 to 1372 °C J: –210 to 1200 °C 1% + 1 °C	K: –200 to 1372 °C J: –210 to 1200 °C 1% + 1 °C
Continuity with beeper		Yes	Yes	Yes	Yes
Diode test		Yes	Yes	Yes	Yes
Data management					
Min/max recording		Yes	Yes	Yes	Yes
Display hold		Yes	Yes	Yes	Yes
Peak hold		Yes	Yes	Yes	Yes
Manual datalogging		Yes	Yes	Yes	Yes
Null		Yes	Yes	Yes	Yes
Connectivity		IR-USB/*Bluetooth*	IR-USB/*Bluetooth*	IR-USB/*Bluetooth*	IR-USB/*Bluetooth*
% scale of 4-20 mA		Yes	Yes	Yes	Yes
Special features ★					
OLED display		—	—	Yes ★	Yes ★
Beep + visual alert		Yes	Yes	Yes	Yes
Low pass filter (LPF)		Yes	Yes	Yes	Yes
Z_{LOW} - low impedance mode		N/A	Yes	Yes	Yes
Smart Ω		N/A	Yes	Yes	Yes
Qik-V		Yes	N/A	N/A	N/A
Safety and regulatory					
Over-voltage safety protection		CAT III 1000 V, CAT IV 600 V	CAT III 1000 V, CAT IV 600 V	CAT III 1000 V, CAT IV 600 V	CAT III 1000 V, CAT IV 600 V
EN/IEC 61010-1:2001 compliance		Yes	Yes	Yes	Yes
CSA C22.2 No. 61010-1:2004 compliance		Yes	Yes	Yes	Yes
General					
Operating temperature		–20 to 55 °C, 0 to 80% RH	–20 to 55 °C, 0 to 80% RH	–20 to 55 °C, 0 to 80% RH	–40 to 55 °C, 0 to 80% RH ★
Altitude		3000 m	3000 m	3000 m	3000 m
Battery (included)		4 x AAA alkaline	4 x AAA alkaline	4 x AAA alkaline	4 x AAA lithium
Battery life		300 hours	300 hours	30-60 hours	50-100 hours
Warranty		3 years	3 years	3 years	3 years
Dimensions (H x W x D)		207.0 x 92.0 x 59.0 mm	207.0 x 92.0 x 59.0 mm	207.0 x 92.0 x 59.0 mm	207.0 x 92.0 x 59.0 mm

★ represents key specifications/feature

For complete specifications, please refer to data sheet 5990-6425EN

Web link

www.agilent.com/find/handhelddmm
www.agilent.com/find/U1273AX
http://wireless.agilent.com/videos/u1270/index.html

How to?

Test for Stray Voltage Using the U1272A
http://cp.literature.agilent.com/litweb/pdf/5990-6517EN.pdf

Ground Resistance Measurement with Smart Ohm
http://cp.literature.agilent.com/litweb/pdf/5990-7323EN.pdf

U1190 Series – Clamp Meters

Agilent's U1190 Series clamp meters are packed with a wealth of features to help you work more efficiently and more safely. Housed in robust cases, each model comes with an innovative wire separator that helps you isolate and measure individual wires in a bundle. The built-in LED flashlight illuminates your test area and Vsense performs non-contact voltage detection. The clamp meters are also certified with both CAT III 600 V and CAT IV 300 V ratings to cover wider measurement categories.

Features

- Unique wire separator to separate wires from a bundle
- Vsense to perform non-contact voltage detection[1]
- Built-in LED flashlight to illuminate test area[1]
- Current measurement up to 600 A[2]
- Digital multimeter (DMM) with Resistance, Capacitance[1], DCV, ACV, DCμA[3], ACμA[3], Continuity and Diode test measurements
- CAT III 600 V / CAT IV 300 V safety ratings

1. *Only for U1192A, U1193A and U1194A*
2. *Only for U1193A and U1194A*
3. *Only for U1194A*

CAT III 600 V
CAT IV 300 V

Application with U1190 Series Clamp Meters

Convenient and affordable clamp meters – for electricians in commercial or residential electrical installation and maintenance

Basic current measurement is an essential task for electricians working in commercial or residential electrical installation and maintenance. These electricians need an affordable yet versatile tool to help them conveniently install and troubleshoot various applications such as wire installation at distribution transformers, panel circuit controller, or even troubleshooting electrical motor.

The U1190 Series clamp meters comes with an innovative 'wire separator' design that enables electricians to easily clamp on a targeted wire. Designed with a pointed tip, the wire separator allows users to isolate an individual wire from a bundle. In this way, the user does not have to manually use his hands to isolate the targeted wire for current measurements, hence eliminating the risk of getting into contact with live wires. All models also come with basic digital multimeter functions for electricians that need quick access to basic voltage, resistance, capacitance, continuity, diode and frequency tests.

Integrated with a LED flashlight, the U1190 Series clamp meters allow electricians to illuminate the test area while clamping on the wire. The built-in LED flashlight enables electricians to work safer even in dark or poorly lit environments. Each clamp meter is certified with CAT III 600 V / CAT IV 300 V safety rating to cover wider measurement categories.

The built-in flashlight illuminates test area

Specifications of the U1190 Series Clamp Meters

	U1191A	U1192A	U1193A	U1194A
Basic features				
Counts	6,000	6,000	6,000	6,000
RMS method	Average Responding	Average Responding	True RMS	True RMS
Measurement range				
DC voltage	600 V	60 to 600 V	60 to 600 V	60 to 600 V
AC voltage	600 V	60 to 600 V	60 to 600 V	60 to 600 V
DC A current	N/A	N/A	N/A	60 to 600 A
DC µA current	N/A	N/A	N/A	60 to 600 µA
AC current	400 A	40 to 600 A	60 to 600 A	60 to 600 A
AC µA current	N/A	N/A	N/A	60 to 600 µA
Resistance	600 Ω to 6 kΩ	600 Ω to 60 kΩ	600 Ω to 60 kΩ	600 Ω to 60 kΩ
Capacitance	N/A	600 µF to 6 mF	600 µF to 6 mF	600 µF to 6 mF
Diode	1.5 V	1.5 V	1.5 V	1.5 V
Continuity	600 Ω	600 Ω	600 Ω	600 Ω
Temperature	N/A	N/A	N/A	K-type: –40 °C to 1200 °C
Frequency	N/A	99.99 Hz to 99.99 kHz	99.99 Hz to 99.99 kHz	99.99 Hz to 99.99 kHz
Data management				
Data hold	Yes	Yes	Yes	Yes
Null	Yes	Yes	Yes	Yes
MAX/MIN/AVG	Yes	Yes	Yes	Yes
Auto/Range	Yes	Yes	Yes	Yes
Other features				
Backlight	Yes	Yes	Yes	Yes
Auto power OFF	Yes	Yes	Yes	Yes
Wire separator	Yes ★	Yes ★	Yes ★	Yes ★
Built-in flashlight	No	Yes ★	Yes ★	Yes ★
Vsense	No	Yes	Yes	Yes
Safety and regulatory				
Over-voltage safety protection	CAT III 600 V / CAT IV 300 V	CAT III 600 V / CAT IV 300 V	CAT III 600 V / CAT IV 300 V	CAT III 600 V / CAT IV 300 V
EN/IEC 61010-1, CE, CSA compliance	Yes	Yes	Yes	Yes
General				
Operating temperature	–10 to 50 °C, 0 to 80% RH	–10 to 50 °C, 0 to 80% RH	–10 to 50 °C, 0 to 80% RH	–10 to 50 °C, 0 to 80% RH
Battery (included)	1.5 V	1.5 V	1.5 V	1.5 V
Battery life	200 hours	200 hours	200 hours	200 hours
Warranty	3 years	3 years	3 years	3 years
Dimensions (H x W x D)	225.0 x 77.1 x 38.6 mm	225.0 x 77.1 x 38.6 mm	238.0 x 77.1 x 38.6 mm	238.0 x 77.1 x 38.6 mm
Clamp opening	31 mm	31 mm	37 mm	37 mm
Clamping diameter	27 mm	27 mm	35 mm	35 mm

★ represents key specifications/features

For complete specifications, please refer to data sheet 5990-8646EN

Web link

www.agilent.com/find/clampmeter
www.agilent.com/find/U1190clamp

U1210 Series – Handheld Clamp Meters

Measurements of electrical distribution cables can be challenging and risky. For cables up to two inches in diameter, the Agilent U1210 Series handheld clamp meters enable high-current measurements without breaking the circuit. Unlike most clamp meters, they also include DMM capabilities—resistance, capacitance, frequency and temperature—to simplify troubleshooting during installation and maintenance. Best of all, they provide an extra layer of protection with CAT IV 600 V and CAT III 1000 V safety ratings.

Features

- Large clamp opening of 52 mm or 2 "
- High measurement capability of up to 1000 A for AC, DC or AC+DC
- CAT III 1000 V/CAT IV 600 V safety rating
- Includes full-featured DMM with resistance, capacitance, frequency and temperature functions
- High resolution measurements - measure current as low as 0.01 A
- Peak hold capability
- *Bluetooth* wireless connectivity (optional U1177A Infrared (IR)-to-*Bluetooth* Adapter required)

Applications with U1210 series Handheld Clamp Meters

Smooth sailing current measurements even in a distance

Making current measurements can be strenuously demanding due to its complexity and high current involved. Electrical distribution rooms being typically situated at different areas further complicates maintenance and troubleshooting. This is due to the need for electricians to commute back and forth in order to cross check measurement results.

Now you can make high current measurements in a safer and more convinient manner by adding the new Bluetooth capability to your existing U1210 series handheld clamp meters. The U1177A Infrared-to-Bluetooth adapter allows you to easily monitor measurements and log data up 10-metres range across all Android platform devices. Simplify your day to day task with a value added device for maximum efficiency and productivity in all sorts of hard-to-reach environments.

Large jaw opening and high-current measurement capability - for installation and maintenance of high-current distribution systems and cables

Current measurements at power distribution sites can be challenging as cables are usually large as they contain high current sources. The need of current measurement methods that are safe and easy add complexity to the task of acquiring accurate current data. Conventionally, a current conductor has to be disconnected to allow probe insertion and this is not only hazardous when high currents are involved, but not convenient as well.

With a two-inch (52 mm) jaw opening, the U1210 Series handheld clamp meters simplify current measurements for thick cables, without breaking the circuit. The clamp meters provide the ability to handle big currents, with current measurement capability of up to 1000 A (AC, DC, AC+DC). This series also enables high resolution measurements, with the ability to measure currents as low as 0.01 A. You are able to measure in-rush current as well with the clamp meters' peak hold feature.

The U1210 Series clamp meters offer dual-ranging mode – manual and auto, min/max recording capability and large dual display for additional accessibility when it comes to data collection or analysis.

4-mm-tip probes

Each clamp meter provides an extra layer of protection with CAT IV 600 V and CAT III 1000 V safety ratings. When performing a measurement with the multimeter, test probes with 4-mm tips (which is bundled with each clamp meter) can be used to further prevent dangerous arc flash if the tips are inadvertently shorted together during probing.

Full-featured digital multimeter functions – make more than just current measurements

The U1210 Series clamp meters are versatile handheld test tools that combine a current clamp with a digital multimeter (DMM).

The U1210 Series provides basic functions of a multimeter with wide measurement ranges to cater for a broad range of applications: ACA, DCV, ACV, OHM, audible continuity, capacitance, diode and frequency tests.

These meters also provide auto-ranging capability, built-in peak hold for in-rush current measurement, temperature and capacitance measurement capability, large backlight display and one-hand operation.

Specifications of the U1210 Series Clamp Meters

	U1211A	U1212A	U1213A
Display			
Dual display	Yes	Yes	Yes
Counts	4000	4000	4000
Bar-graph	12 segments	12 segments	12 segments
Backlit	Yes	Yes	Yes
Auto power OFF	Yes	Yes	Yes
Basic features			
True RMS	AC	AC/DC	AC+DC
Auto/manual ranging	Yes	Yes	Yes
Measurements			
Voltage DC	0.1 - 1000 V (0.5%)	0.1 - 1000 V (0.5%)	1 mV - 1000 V (0.2%)
Voltage AC	0.1 - 1000 V (1.0%)	0.1 - 1000 V (1.0%)	1 mV - 1000 V (1.0%)
Current DC	N/A	0.01 - 1000 A (1.5%)	0.01 - 1000 A (1.5%)
Current AC	0.1 - 1000 A (1.0%) ★	0.1 - 1000 A (2.0%) ★	0.01 - 1000 A (2.0%) ★
Resistance	4 kΩ (0.5%)	4 kΩ (0.5%) ★	40 MΩ (0.3%) ★
Capacitance	0.1 - 4000 µF (2.0%)	0.1 - 4000 µF (2.0%)	1 - 4000 µF (1.0%)
Diode	Yes	Yes	Yes
Temperature	N/A	K-type (–200 to 1372 °C)	K-type (–200 to 1372 °C)
Frequency	Yes	Yes	Yes
Duty cycle	N/A	N/A	Yes

Accuracy information shown in brackets is the best accuracy throughout the range.

★ represents key specifications/features

Specifications of the U1210 Series Clamp Meters *Continued*

	U1211A	U1212A	U1213A
Data management			
Data hold	Yes	Yes	Yes
Null	Yes	Yes	Yes
MAX/MIN/AVG	Yes	Yes	Yes
Peak hold	Yes	Yes	Yes
Connectivity	*Bluetooth*	*Bluetooth*	*Bluetooth*
Safety and regulatory			
Over-voltage safety protection	CAT III 1000 V/CAT IV 600 V	CAT III 1000 V/CAT IV 600 V	CAT III 1000 V/CAT IV 600 V
EN/IEC 61010-1:2001 compliance	Yes	Yes	Yes
CSA C22.2 No. 61010-1:2004 compliance	Yes	Yes	Yes
General			
Operating temperature	–10 to 50 °C	–10 to 50 °C	–10 to 50 °C
Clamp opening	2 " ★	2 " ★	2 " ★
Battery (included)	Alkaline 9 V	Alkaline 9 V	Alkaline 9 V
Battery life	60 hours	60 hours	60 hours
Warranty	3 years	3 years	3 years
Dimensions (H x W x D)	273.0 x 106.0 x 43.0 mm	260.0 x 106.0 x 43.0 mm	260.0 x 106.0 x 43.0 mm

★ represents key specifications/features

For complete specifications, please refer to data sheet 5990-3459EN

Web link
www.agilent.com/find/clampmeter

How to ?
Troubleshoot Three-Phase AC Motors with U1210 Series Handheld Clamp Meters
http://cp.literature.agilent.com/litweb/pdf/5990-5192EN.pdf

Digital Oscilloscopes

U1600 Series - Handheld Digital Oscilloscopes

A scope with a color waveform display. A DMM for basic measurements. A data logger to record DMM readings to a PC. All three capabilities are in one instrument—the U1600 Series of handheld digital oscilloscopes. Designed to address the portability needs of various installation and maintenance applications, these scopes enable clear waveform viewing, easy waveform analysis and quick isolation of signal glitches. With high-performance features loaded into one robust package, mobile troubleshooting is a breeze.

No. 1 Product of the Year as voted by readers—2006

Features

- Built-in DMM and data logger
- Large 4.5 " color display
- 200 MSa/s high sampling rate and deep memory
- Built-in Quick Help, available in multiple languages
- Data logging to instrument and PC
- Convenient data download to USB flash drive*

** with Option 001*

Applications with the U1600 Series Handheld Digital Oscilloscopes

Fast sampling, deep memory—so you won't miss a glitch

Whether a machine is down for repair or maintenance, returning it to service as quickly as possible is crucial. With the U1600 Series, you can carry a scope to the problem knowing you can make measurements without an AC outlet.

One common fault in the printed circuit board assembly (PCA) of such machines is glitches caused by factors ranging from component wear-and-tear to an unclean power source. Effectively capturing these glitches requires a scope with a high sampling rate and deep memory. The U1600 Series provides 20 MHz and 40 MHz bandwidths with up to 200 MSa/s real-time sampling rate. With its deep memory, you can zoom in on a particular segment of a signal to view even the most subtle details. The scopes also offer advanced triggering types such as edge, pulse width, pattern and video to assist in quick isolation of critical events.

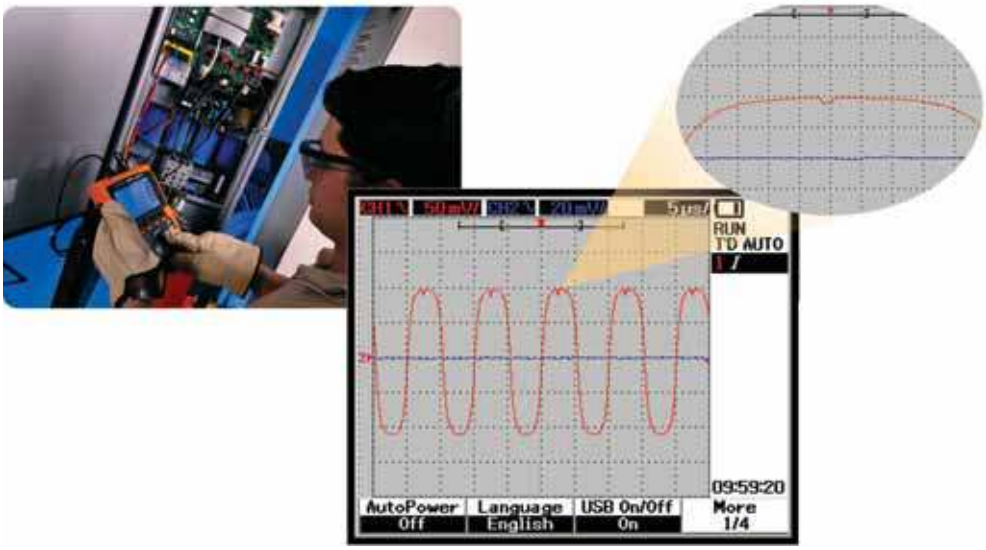

Advanced FFT and waveform math follow wherever you go

Time is especially precious on the manufacturing line. When a test system fails, quick troubleshooting and analysis is needed to get the line running again as soon as possible.

The portable, lightweight U1600 Series is more convenient than conventional benchtop oscilloscopes. Its small form adds versatility when measuring hard-to-reach points in the test system, and its large color LCD display enables clear viewing of waveforms.

Analysis of complex waveforms is easy with the U1600 Series' dual waveform math (DWM) and fast Fourier transform (FFT) functions. The FFT function provides a frequency-domain view of measurements in four windowing techniques: Rectangular, Hanning, Hamming and Blackman-Harris.

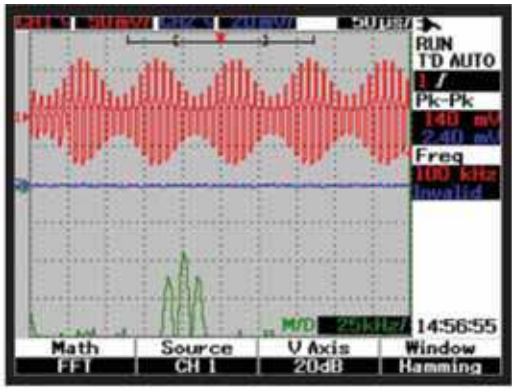

An FFT of the upper waveform reveals three spectral lines that represent the carrier frequency and its sidebands, enabling informative analysis of amplitude-modulated signals.

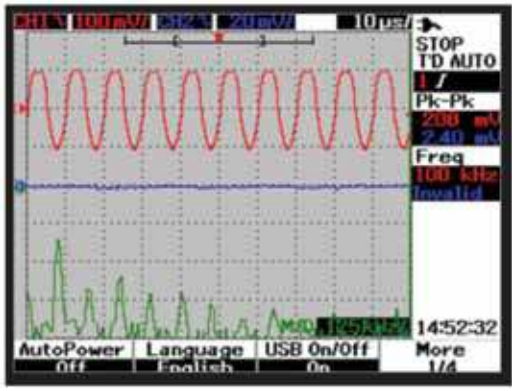

Although the sine-wave signal seems flawless in the time domain, doing an FFT reveals the presence of harmonic distortion, which is seen as integer-multiple spectral components in the frequency domain.

Specifications of the U1600 Series Digital Oscilloscopes

	U1602B	U1604B
Display		
General	4.5" color LCD ★	4.5" color LCD ★
Counts (DMM function)	6000	6000
Scope		
Channels	2	2
Bandwidth (–3 dB)	DC to 20 MHz	DC to 40 MHz
Maximum sampling rate Single Channel Operation Dual Channel Operation	200 MSa/s interleave ★ 100 MSa/s each channel ★	200 MSa/s interleave ★ 100 MSa/s each channel ★
Maximum recording length Single Channel Operation Dual Channel Operation	125 Kpts ★	125 Kpts ★
Cursor and zoom functions	Yes	Yes
Waveform math	Yes	Yes
FFT	N/A	Rectangular, Hamming, Hanning, Blackman-Harris ★
Automatic measurements	Up to 22 measurements	Up to 22 measurements
Coupling	AC, DC, GND	AC, DC, GND
Input impedance	1 MΩ I I < 20 pF	1 MΩ I I < 20 pF
Range	50 ns to 50 s/div	10 ns to 50 s/div
Resolution	2 ns	400 ps
Rise time	< 17.5 ns	< 8.8 ns
Trigger types	Edge, Pattern, Pulse width, Video	Edge, Pattern, Pulse width, Video
Trigger modes	Auto, Normal, Single	Auto, Normal, Single
Internal scope storage	Up to 10 setups and traces	Up to 10 setups and traces
DMM		
True RMS	AC+DC	AC+DC
Voltage AC/DC	600 V	600 V
Current AC/DC	600 A	600 A
Resistance	60 MΩ	60 MΩ
Capacitance	0.01 nF to 300 µF	0.01 nF to 300 µF
Temperature	6000 °C, K-type thermocouple	6000 °C, K-type thermocouple
Continuity with beeper	Yes	Yes
Diode test	Yes	Yes
Data logger		
Min/Max/Avg recording	Yes	Yes
Data logging (requires bundled USB 2.0 full-speed cable for connection to PC	Internal: 250 points To PC: virtually unlimited	Internal: 250 points To PC: virtually unlimited
Time span	150 seconds to 20 days (auto range)	150 seconds to 20 days (auto range)

★ represents key specifications/features

Specifications of the U1600 Series Digital Oscilloscopes *Continued*

	U1602B	U1604B
Safety and regulatory		
Over-voltage safety protection	CAT III 300 V	CAT III 300 V
EN/IEC 61010-1:2001 compliance	Yes	Yes
CSA C22.2 No. 61010-1:2004 compliance	Yes	Yes
General		
Operating temperature	0 to 50 °C	0 to 50 °C
Battery (included)	Rechargeable Ni-MH	Rechargeable Ni-MH
Battery life	4 hours	4 hours
I/O	• USB 2.0 full-speed client for data transfers to PC • USB 2.0 full-speed host for data transfers to USB flash drive (Option 001)	• USB 2.0 full-speed client for data transfers to PC • USB 2.0 full-speed host for data transfers to USB flash drive (Option 001)
Warranty	3 years	3 years
Dimensions (H x W x D)	241.0 x 138.0 x 66.0 mm	241.0 x 138.0 x 66.0 mm

For complete specifications, please refer to data sheet 5989-5576EN

Web link
www.agilent.com/find/handheldscope

How to ?
Perform Metal Scrap Sorting Machine Installation with U1600A Series
http://cp.literature.agilent.com/litweb/pdf/5989-9786EN.pdf

U1610A/U1620A- Handheld Digital Oscilloscopes

Agilent's U1610A/U1620A is the world's first handheld oscilloscope with a VGA display. With a bandwidth of 100/200 MHz, the handheld oscilloscope offers a floating measurement capability with two CAT III 600 V isolated channels. With up to 2 GSa/s sampling rate and 2 Mpts memory depth, it captures more waveforms from signals such as pulse width modulated circuit, in-rush, transient, and motor start up sequences. The benchtop-like display and dual window zoom function allow you to easily identify problem areas and zoom in for more detailed analysis. Now, you can view signals in detail and detect glitches easily.

NEW

Features

- 100/200 MHz bandwidth with two isolated channels
- 5.7 " VGA TFT LCD display with 3 selectable viewing modes (indoor, outdoor and night vision)
- Up to 2 Mpts memory depth and 2 GSa/s sampling rate allows detailed analysis of captured glitches
- 10,000-count resolution on DMM display
- Channel-to-channel isolation with CAT III 600 V safety ratings
- Data logging capability and USB connectivity
- Up to 10 selectable languages on the User Interface (UI)

Applications with the U1610A/U1620A Handheld Digital Oscilloscope

View even the most subtle details- with fast sampling rate and deep memory

A good oscilloscope must be accompanied with fast sampling rate and deep memory depth, because these two go hand-in-hand. With deep memory of 2Mpts and sampling rate of 2 GSa/s, non-repeating signals can be captured over a wider time base, allowing you to zoom into specific areas of interest. What's more, its dual window zoom feature display allows you to work more productively by simultaneously viewing signals captured over a period of time and zooming into the most subtle details. Other features include advanced triggering types such as edge, pulse width, CAN and video to assist in quick isolation of critical events.

Three viewing modes for optimized viewing under all lighting conditions

Viewing waveforms in clarity is important, especially for an oscilloscope which is a visual tool. This is why our U1610A/U1620A oscilloscope comes with a 5.7 " VGA TFT LCD display that enables clear viewing of measurements on-site and on the field. With the option of up to three viewing modes, users can now view signals under all lighting conditions, including in indoor, outdoor or dark environments. All three viewing modes have predefined contrast levels for customized lighting conditions and optimized battery life.

Indoor mode

The indoor mode has high contrast and brightness levels to clearly distinguish waveforms under the indoor light environment. Furthermore, the TFT LCD technology enables the screen to be viewed across wide viewing angles for more efficient troubleshooting task.

Outdoor mode

When performing field work in an outdoor environment, users can easily switch to this viewing mode via a set of accessible soft keys. This mode works in an anti-glare mechanism; it filters out excessive sunlight, hence reducing the risk of misreading or misinterpreting measurements under broad day light.

Night vision mode

The night vision mode is tailored to be viewable under subdued lighting by enabling high contrast of the screen background against waveforms. By switching into this mode, the screen automatically adjust with proper colour correction, making the waveforms viewable. This mode is useful when measuring high speed signals, particularly in non-repetitive signals.

Specifications of the U1610A/U1620A Digital Oscilloscope

	U1610A	U1620A
Display		
General	5.7 " colour VGA TFT LCD ★	5.7 " colour VGA TFT LCD ★
Counts (DMM function)	10,000	10,000
Scope		
Channels	2	2
Bandwidth	100 MHz	200 MHz
Maximum sampling rate Single Channel Operation Dual Channel Operation	 1 GSa/s interleave 500 MSa/s each channel	 2 GSa/s interleave 1 GSa/s each channel
Maximum recording length Single Channel Operation Dual Channel Operation	 120 Kpts interleave 60 Kpts each channel	 2 Mpts interleave 1 Mpts each channel
Cursor and Zoom functions	Yes	Yes

★ represents key specifications/features

Specifications of the U1610A/U1620A Digital Oscilloscope *Continued*

	U1610A	U1620A
Scope *Continued*		
Waveform math	CH1 + CH2, CH1 – CH2, CH2 – CH1, CH1 × CH2, CH1/CH2, CH2/CH1, d/dt (CH1), d/dt (CH2), ∫(CH1) dt, ∫(CH2)dt, FFT	CH1 + CH2, CH1 – CH2, CH2 – CH1, CH1 × CH2, CH1/CH2, CH2/CH1, d/dt (CH1), d/dt (CH2), ∫(CH1) dt, ∫(CH2)dt, FFT
FFT	Yes	Yes
Automatic measurements	Up to 24 measurements	Up to 24 measurements
Coupling	DC, AC	DC, AC
Input impedance	1 MΩ ± 1% ≈ 22 pF ± 3 Pf	1 MΩ ± 1% ≈ 22 pF ± 3 Pf
Range	5 ns/div to 50 s/div	2 ns/div to 50 s/div
Resolution	8-bits	8-bits
Rise time	3.50 ns typical	1.75 ns typical
Trigger types	Edge, Glitch, TV, Nth Edge, CAN, LIN	Edge, Glitch, TV, Nth Edge, CAN, LIN
Trigger modes	Normal, Single, Auto	Normal, Single, Auto
Internal scope storage	10 setups and waveforms can be saved and recalled internally	10 setups and waveforms can be saved and recalled internally
DMM		
True RMS	Yes	Yes
Voltage AC/DC	1000.0 mV to 1000.0 V	1000.0 mV to 1000.0 V
Current AC/DC	40 A/400 A [1]	40 A/400 A [1]
Resistance	1000.00 Ω to 100.00 MΩ	1000.00 Ω to 100.00 MΩ
Capacitance	1000.0 nF to 10.000 mF	1000.0 nF to 10.000 mF
Temperature	–40 to 1000 °C	–40 to 1000 °C
Continuity with beeper	Yes	Yes
Diode test	1 V	1 V
Data logger		
Min/Max/Avg recording	Yes	Yes
Data logging (requires bundled USB 2.0 full-speed cable for connection to PC)	Yes	Yes
Time span	8 days	8 days
Safety and Regulatory		
Over-voltage safety protection	CAT III 600 Vrms [2]	CAT III 600 Vrms [2]
EN/IEC 61010-1:2001 compliance	Yes	Yes
CSA C22.2 No. 61010-1:2004 compliance	Yes	Yes
IP rating	IP 41	IP 41
General		
Operating temperature	0 to 50 °C (with battery only) 0 to 40 °C (with power adapter)	0 to 50 °C (with battery only) 0 to 40 °C (with power adapter)
Battery (included)	Yes	Yes
Weight	<2.5 kgs	<2.5 kgs
Battery life	3 hours	3 hours
I/O	USB 2.0 full speed host/client port	USB 2.0 full speed host/client port
Warranty	3 years	3 years
Dimensions (H x W x D)	183 x 270 x 65 mm	183 x 270 x 65 mm
Special features		
Indoor, outdoor, night vision mode	Yes ★	Yes ★
UI language	10 selectable languages ★	10 selectable languages ★

[1] *Use U1583B for current measurement*

[2] *10:1 probe for CAT III 600 V*

★ represents key specifications/features

For complete specifications, please refer to data sheet 5990-9523EN

Web Link

www.agilent.com/find/U1600

Multi-function Calibrator/Meter

U1401B – Handheld Multi-function Calibrator/Meter

More often than not, the calibration of process control parts requires simultaneous measurements with a DMM. Carry two tools in one—and calibrate while you measure—with the Agilent U1401B handheld multi-function calibrator/meter. Now you can travel light, whether you're doing calibration for validation, troubleshooting, or service and maintenance. Slip the robust U1401B in its sturdy carrying case and you're ready to go.

Features

- 50,000-count resolution on dual display
- Simultaneous source and measure capabilities
- Bipolar voltage and current, square-wave, auto scan and ramp outputs
- Full-span DMM measurement and recording functions
- Built-in charging capability

Applications with the U1401B Multi-Function Calibrator/Meter

Simultaneous source and measure with just one tool

Commonly used in today's process control systems are signal conditioners and loop-powered isolators. These typically involve high-accuracy signals and demand periodic calibration to ensure optimum performance.

Calibration requires sourcing a known signal into the device and measuring its output. For instance, calibration of a loop-powered isolator with 4-20 mA input/output range involves accurately simulating a known mA signal into the isolator and measuring its corresponding mA output to ensure that it is performing well within its specifications. Being well-equipped means you need to carry both a calibrator and digital multimeter (DMM) as you go about your calibration tasks.

Not so with the U1401B calibrator/meter. One tool equips you with both sourcing and measuring capabilities so you no longer need to carry a separate DMM when you're away from the bench.

Built-in pulse signal generator for calibrating flow meter systems

Flow meters output pulses with frequencies that are proportional to the rate of flow of liquid that passes through its bladed turbine rotor. These pulses are then fed to a signal conditioner. Calibration of the signal conditioner requires injecting known pulse signals into it and checking that the resulting output is what it should be.

Right on site and with the U1401B in hand, you can conveniently simulate the flow meter's output pulses into the signal conditioner, without needing a separate function generator.

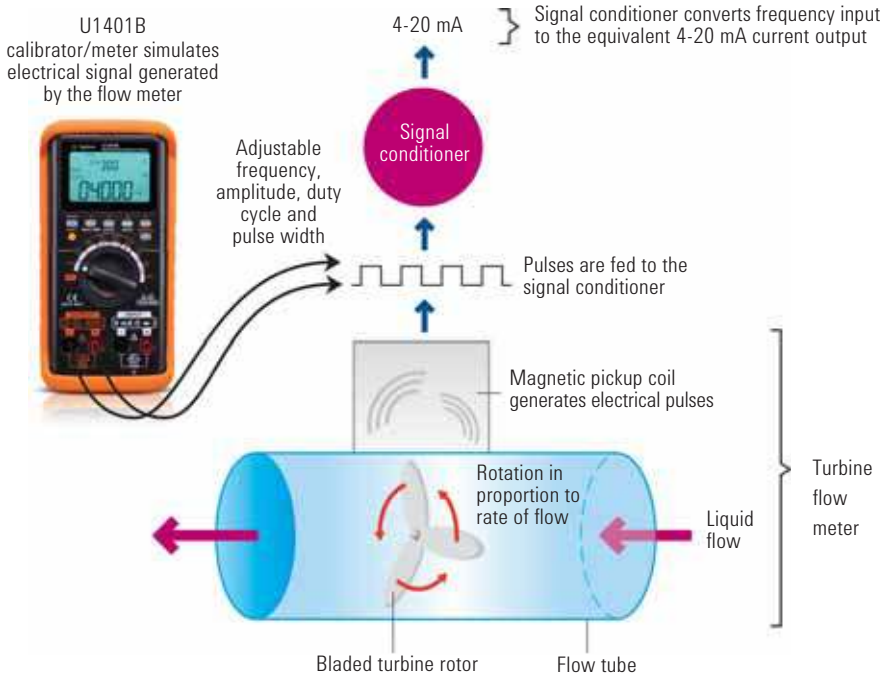

Specifications of the U1401B Multi-function Calibrator/Meter

	U1401B
Display	
Dual display	Yes
Counts	50,000
Backlight	Yes
Source	
Voltage	± 15 V
Current	± 25 mA
Square-wave	0.5 Hz to 4.8 kHz, selectable Hz and % ★
Auto scan and ramp	Yes
Simultaneous operation with MEASURE function	Yes ★
Measure	
True RMS	AC+DC
Basic DCV accuracy	0.03% + 5 counts
Auto/Manual ranging	Yes
Voltage AC/DC	250 V
Current AC/DC	500 mA
Resistance	50 MΩ
Frequency	200 kHz
Temperature	1372 °C, K-type thermocouple
Continuity with beeper	Yes
Diode test	Yes
4-20 mA, 0 to 20 mA % scale	Yes
Simultaneous operation with SOURCE function	Yes ★

★ represents key specifications/features

Specifications of the U1401B Multi-function Calibrator/Meter *Continued*

	U1401B
Data management	
Min/Max/Avg recording	Yes
Peak recording	Yes
Data hold	Yes
Data logging to PC (requires IR-to-USB cable U5481A for connection to PC)	Yes
Safety and regulatory	
Over-voltage safety protection	CAT II 150 V
EN/IEC 61010-1:2001 compliance	Yes
CSA C22.2 No. 61010-1:2004 compliance	Yes
General	
Operating temperature	0 to 40 °C
Battery (included)	9.6 V Ni-MH rechargeable
Battery life	80 hours
I/O	IR-USB
Warranty	3 years
Dimensions (H x W x D)	192.0 x 90.0 x 54.0 mm

★ represents key specifications/features

For complete specifications, please refer to data sheet 5990-3459EN

Web link
www.agilent.com/find/handheld-calibrator-meter

How to ?
Easily Perform Process Control Calibration U1401A
http://cp.literature.agilent.com/litweb/pdf/5990-3932EN.pdf

Capacitance/LCR meters

U1700 Series – Handheld Capacitance/LCR meters

Agilent's U1730C Series handheld LCR meters allow you to measure at frequencies as high as 100 kHz—a capability typically found only in benchtop meters. Get measurements done faster using the one-touch automatic identification function button which displays component type and more detailed component analysis such as Z, ESR, and DCR. Ideal for testing on the go, these LCR meters operate on a battery that lasts up to 16 hours. With the U1730C Series that is built for your convenience, you can perform quick and basic LCR measurements at an affordable price.

Features

- 20,000 counts resolution
- 0.2% basic accuracy
- Wide LCR ranges with three to five selectable test frequencies (up to 100 kHz for U1733C)
- Auto identification (*Ai*) automatically determines and displays component type and measurements
- Detailed component analysis with DCR, ESR, Z, D, Q, and θ functions
- Battery life of 16 hours/AC-powered
- IR-to-USB connectivity for data logging to PC

Applications with the U1700 Series Capacitance/LCR Meters

The U1730C Series handheld is a LCR meter with a wide range of test frequencies of up to 100 kHz. It also covers wide measurement parameters including Z, L, C, R, DCR, ESR as well as D, Q, and θ for more detailed component analysis. These features make the U1730C Series ideal both in component evaluations on the production line and for fundamental impedance testing.

SMD tweezer for testing surface-mount devices

The optional U1782B SMD tweezer enables easy testing of surface-mount devices. The tweezer comes with three shrouded banana plugs and an extended reach of 770 mm. The U1700 Series guard terminal provides your measurements with better noise immunity and accurate readings.

Tolerance and compare modes for quick component sorting

On the manufacturing floor, components may come in large batches for quick sorting to pre-defined specifications. Tolerance mode in the U1700 Series lets you zap through sorting of incoming capacitors, inductors or resistors to 1%, 5%, 10% or 20% tolerance of the specified reference value.

Additionally, compare mode in the U1701B capacitance meter allows easy memory save/recall of up to 25 High/Low limit settings for convenient Pass/Fail screening of capacitors. This means speedier testing due to reduced set-up time and risk of manual input errors.

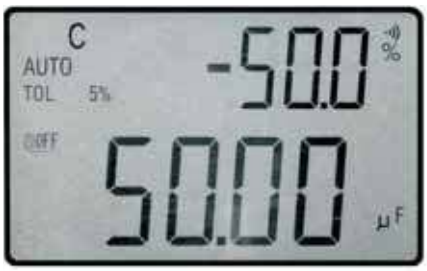

Tolerance mode of 1%, 5%, 10% and 20% are available in capacitance and LCR models.

Compare mode in the U1701B reduces test set-up time for capacitor sorting.

Specifications of the U1700 Series Capacitance/LCR Meters

	U1701B	U1731C	U1732C	U1733C
Display				
Dual display	Yes	Yes	Yes	Yes
Counts	11,000	20,000	20,000	20,000
Backlight	Yes	N/A	Yes	Yes
Measurements				
Capacitance	1000 pF to 199.99 mF	200 pF to 20 mF	20 pF to 20 mF	20 pF to 20 mF
Inductance	N/A	200 µH to 2000 H	20 µH to 2000 H	20 µH to 2000 H
Resistance	N/A	2 Ω to 200 MΩ	2 Ω to 200 MΩ	2 Ω to 200 MΩ
Dissipation factor (DF)	N/A	Yes	Yes	Yes
Quality factor (QF)	N/A	Yes	Yes	Yes
Phase angle (θ) measurement	N/A	Yes	Yes	Yes
Tolerance mode	1%, 5%, 10%, 20% ★	1%, 5%, 10%, 20% ★	1%, 5%, 10%, 20% ★	1%, 5%, 10%, 20% ★
Compare mode	25 sets of non-volatile High/Low limit settings ★	N/A	N/A	N/A
Test method/frequency	DC charge/discharge	100 Hz, 120 Hz, 1 kHz	100 Hz, 120 Hz, 1 kHz, 10 kHz	100 Hz, 120 Hz, 1 kHz, 10 kHz, 100 kHz ★
Data management				
Min/Max/Avg recording	Yes	Yes	Yes	Yes
Data hold	Yes	Yes	Yes	Yes
Data logging to PC (requires IR-to-USB cable U5481A for connection to PC)	Yes	Yes	Yes	Yes
Safety and regulatory				
EN/IEC 61010-1:2001 compliance	Yes	Yes	Yes	Yes
General				
Operating temperature	0 to 50 °C	–10 to 55 °C, 0 to 80% R.H.	–10 to 55 °C, 0 to 80% R.H.	–10 to 55 °C, 0 to 80% R.H.
Battery (included)	Alkaline 9 V AC power adapter and cord available as option	Yes	Yes	Yes
Battery life	80 hours	16 hours	16 hours	16 hours
I/O	IR-to-USB	IR-to-USB	IR-to-USB	IR-to-USB
Warranty	3 years	3 years	3 years	3 years
Dimensions (H x W x D)	184 x 87 x 41 mm	184 x 87 x 41 mm	184 x 87 x 41 mm	184 x 87 x 41 mm

★ represents key specifications/features

For complete specifications, please refer to data sheet 5990-7778EN

Web link

www.agilent.com/find/handheldlcr

Accessories Compatibility Chart

Ordering number	Description	Handheld clamp meters		Handheld DMMs										Handheld scopes	Hand-held scopes	Handheld calibrator/ meter	Handheld capaci-tance/ LCR meters
		U1211A/ 12A/ 13A	U1191A/ 92A/ 93A/ 94A	U1231A/ 32A/ 33A	U1241B	U1242B	U1251B	U1252B	U1253B	U1271A	U1272A	U1273A	U1273AX	U1602B/ 04B	U1610/ 20A	U1401B	U1701B/ U1731C/ 32C/33C
Kits																	
U1161A	Extended test lead kit	✓	✓	✓	✓	✓	✓	✓	✓	✓	✓	✓	✓	✓	✓	✓	×
U1168A	Standard test lead kit	✓	✓	✓	✓	✓	✓	✓	✓	✓	✓	✓	✓	✓	✓	✓	×
U1180A	Thermocopule adapter+lead kit	×	×	×	×	✓	×	✓	✓	×	✓	✓	✓	×	×	×	×
U1580A	DMM terminal test lead set	✓	✓	✓	✓	✓	✓	✓	✓	✓	✓	✓	✓	✓	✓	✓	×
Probes/leads/clamp																	
U1162A	Alligator clips	✓	✓	✓	✓	✓	✓	✓	✓	✓	✓	✓	✓	✓	✓	✓	×
U1163A	SMT grabbers	✓	✓	✓	✓	✓	✓	✓	✓	✓	✓	✓	✓	✓	✓	✓	×
U1164A	Fine-tip test probes	✓	✓	✓	✓	✓	✓	✓	✓	✓	✓	✓	✓	✓	✓	✓	×
U1169A	Test probe leads	✓	✓	✓	✓	✓	✓	✓	✓	✓	✓	✓	✓	✓	✓	✓	×
U1176A	Probe clip light	✓	✓	✓	✓	✓	✓	✓	✓	✓	✓	✓	✓	✓	✓	✓	✓
U1177A	Infrared (IR)-to-*Bluetooth* Adapter	✓	×	✓	✓	✓	✓	✓	✓	✓	✓	✓	✓	×	×	×	×
U1583B	AC current clamp	×	×	✓	✓	✓	✓	✓	✓	✓	✓	✓	✓	✓	✓	×	×
U1781A	Alligator clip leads	×	×	×	×	×	×	×	×	×	×	×	×	×	×	×	✓
U1782B	SMD tweezer	×	×	×	×	×	×	×	×	×	×	×	×	×	×	×	✓
U5402A	Yellow test lead for mA simulation	×	×	×	×	×	×	×	×	×	×	×	×	×	×	✓	×
Probes/adapters/leads for temperature measurement																	
U1179A	IR connectivity bracket	×	×	×	✓	✓	×	×	×	×	×	×	×	×	×	×	×
U1181A	Immersion temperature probe	✓ (For U1212A/ 13A only)	✓ (For U1194A only)	✓ (For U1233A only)	✓	✓	✓	✓	✓	✓	✓	✓	✓	✓	×	×	×
U1182A	Industrial surface temperature probe	✓ (For U1212A/ 13A only)	✓ (For U1194A only)	✓ (For U1233A only)	✓	✓	✓	✓	✓	✓	✓	✓	✓	✓	×	×	×
U1183A	Air temperature probe	✓ (For U1212A/ 13A only)	✓ (For U1194A only)	✓ (For U1233A only)	✓	✓	✓	✓	✓	✓	✓	✓	✓	✓	×	×	×
U1184A	Temperature probe adapter	✓ (For U1212A/ 13A only)	✓ (For U1194A only)	✓ (For U1233A only)	✓	✓	✓	✓	✓	✓	✓	✓	✓	×	×	✓	×
U1185A	J-type thermocouple and adapter	×	×	×	×	✓	×	✓	✓	×	✓	✓	✓	×	×	×	×
U1186A	K-type thermocouple and adapter	✓ (For U1212A/ 13A only)	✓ (For U1194A only)	✓ (For U1233A only)	✓	✓	✓	✓	✓	✓	✓	✓	✓	✓	×	✓	×
U1586B	Temperature module	×	×	✓ (For U1233A only)	×	×	×	×	×	×	×	×	×	✓	✓	×	×

✓ = *Compatible* × = *Not Compatible*

Accessories Compatibility Chart *Continued*

Ordering number	Description	Handheld clamp meters		Handheld DMMs										Handheld scopes	Handheld scopes	Handheld calibrator/ meter	Handheld capaci-tance/ LCR meters
		U1211A/ 12A/ 13A	U1191A/ 92A/ 93A/ 94A	U1231A/ 32A/ 33A	U1241B	U1242B	U1251B	U1252B	U1253B	U1271A	U1272A	U1273A	U1273AX	U1602B/ 04B	U1610/ 20A	U1401B	U1701B/ U1731C/ 32C/33C
Probes/clips for scope-only functions																	
U1554A	Hook clip for probe tip	×	×	×	×	×	×	×	×	×	×	×	×	✓	✓	×	×
U1560A	Scope probe x 1 CAT III 300 V	×	×	×	×	×	×	×	×	×	×	×	×	✓	✓	×	×
U1561A	Scope probe x 10 CAT III 600 V	×	×	×	×	×	×	×	×	×	×	×	×	✓	✓	×	×
U1562A	Scope probe x 100 CAT III 600 V	×	×	×	×	×	×	×	×	×	×	×	×	✓	✓	×	×
Carrying case/hanging kit																	
U1171A	Magnetic hanging kit	×	×	✓	✓	✓	✓	✓	✓	✓	✓	✓	✓	×	×	×	×
U1172A	Transit case (aluminium-clad)	×	×	✓	✓	✓	✓	✓	✓	✓	✓	✓	✓	×	×	×	×
U1174A	Soft carrying case	×	×	✓	✓	✓	✓	✓	✓	✓	✓	✓	✓	×	×	×	✓
U1175A	Soft carrying case	✓	×	×	×	×	×	×	×	×	×	×	×	×	×	×	×
U1178A	Soft carrying case	×	✓	×	×	×	×	×	×	×	×	×	×	×	×	×	×
U1590A	Soft carrying case (PVC leather)	×	×	×	×	×	×	×	×	×	×	×	×	✓	×	×	×
U1591A	Soft carrying case	×	×	×	×	×	×	×	×	×	×	×	×	×	✓	×	×
U5491A	Carrying case (PVC leather)	×	×	×	×	×	×	×	×	×	×	×	×	×	×	✓	×
Power/cables																	
U1170A	Battery charger adapter	×	×	×	×	×	×	✓	✓	×	×	×	×	×	×	×	×
U1173A	IR-to-USB cable	✓	×	✓	✓	✓	✓	✓	✓	✓	✓	✓	✓	×	×	×	×
U1570A	AC power adapter and cord	×	×	×	×	×	×	×	×	×	×	×	×	✓	×	×	×
U1571A	Ni-MH battery pack	×	×	×	×	×	×	×	×	×	×	×	×	✓	×	×	×
U1572A	Li Ion battery pack	×	×	×	×	×	×	×	×	×	×	×	×	×	✓	×	×
U1573A	Desktop charger & Li Ion battery pack	×	×	×	×	×	×	×	×	×	×	×	×	×	✓	×	×
U1574A	AC/DC adapter	×	×	×	×	×	×	×	×	×	×	×	×	×	✓	×	×
U1575A	Desktop charger	×	×	×	×	×	×	×	×	×	×	×	×	×	✓	×	×
U1577A	USB 2.0 cable	×	×	×	×	×	×	×	×	×	×	×	×	×	✓	×	×
U1780A	AC power adapter and cord	×	×	×	×	×	×	×	×	×	×	×	×	×	×	×	✓
U5481A	IR-to-USB cable	×	×	×	×	×	×	×	×	×	×	×	×	×	×	✓	✓

✓ = *Compatible* × = *Not Compatible*

Optional Accessories

U1161A Extended Test Lead Kit

- Extended test leads: CAT III 1000 V, CAT IV 600 V, 15 A
- Test probe (4-mm tips): CAT III 1000 V, CAT IV 600 V, 15 A
- Medium-sized alligator clips: CAT III 1000 V, CAT IV 600 V, 15 A
- 4-mm banana plugs: CAT II 600 V, 10 A

U1162A Alligator clips

- One pair of insulated alligator clips (red and black). Recommended for use with Agilent standard test leads.
- Rated CAT III 1000 V, CAT IV 600 V, 15 A

U1163A SMT grabbers

- One pair of SMT grabbers (red and black). Recommended for use with Agilent standard test leads.
- Rated CAT II 300 V, 3 A

U1164A Fine-tip test probes

- One pair of fine-tip test probes (red and black). Recommended for use with Agilent standard test leads.
- Rated CAT II 300 V, 3 A

U1168A Standard test lead kit

- Test leads: CAT III 1000 V, CAT IV 600 V, 15 A
- Test probe (19-mm tips): CAT II 1000 V, 15 A
- Test probe (4-mm tips): CAT III 1000 V, CAT IV 600 V, 15 A (highly recommended for CAT IV environment)
- Alligator Clips: CAT III 1000 V, CAT IV 600 V, 15 A
- Fine tip test probes: CAT II 300 V, 3 A
- SMT grabber: CAT II 300 V, 3 A
- Mini grabber (black only): CAT II 300 V, 3 A

U1169A Test probe leads

- Test leads: CAT III 1000 V, CAT IV 600 V, 15 A
- Test probe (19-mm tips): CAT II 1000 V, 15 A
- Test probe (4-mm tips): CAT III 1000 V, CAT IV 600 V, 15 A (highly recommended for CAT IV environment)

U1170A Battery charger adapter

- Includes AC power cord based on country
- For use with U1252A/U1253A DMMs

U1171A Magnetic hanging kit

- For use with handheld DMMs

U1173A IR-to-USB cable

- For remote control and data logging to PC
- Max. baud rate: 19,200 bits per second
- Compatible with all Agilent HH DMMs

U1174A Soft carrying case

The convenient way to carry your DMM and essential accessories

- Dimension (H x W x D): 9 x 5 x 3″

U1175A Carrying case

- Ideal for the U1210 series handheld clamp meters
- Dimension (H x W x D): 290 x 120 x 85 mm

U1176A LED Probe Clip Light

- 3 " in length
- To be clipped onto test probes to increase visibility
- Comes with one AAA battery

U1177A Infrared (IR)-to-*Bluetooth* Adapter

- Dimension (H x W x D): 71 x 39 x 37 mm
- Operated by two 1.5 V AAA batteries
- Compatible with U1210 Series Clamp Meters and all handheld DMMs

U1178A Soft carrying case

- Ideal for the U1190 series handheld clamp meters
- Dimensions (H x W x D): 245 x 120 x 50 mm

U1179A IR connectivity bracket

- Compatible only with the U1240 Series handheld digital multimeters
- Enables wireless remote connectivity when paired with the U1177A or to a PC with U1173A

U1180A Thermocouple adapter/lead kit

Includes thermocouple adapter, thermocouple bead J-type and thermocouple bead K-type.

- T/C adapter J/K-type
- T/C bead J-type: –20 to 200 °C
- T/C bead K-type: –20 to 200 °C

U1181A Immersion temperature probe

- Type-K T/C for use in oil and other liquids
- Measurement range: –50 to 700 °C
- Includes adapter U1184A for connection to DMM
- Requires module U1186A for connection to scope

U1182A Industrial surface temperature probe

- Type-K T/C for use on still surfaces
- Measurement range: –50 to 400 °C
- Includes adapter U1184A for connection to DMM
- Requires module U1186A for connection to scope

U1183A Air temperature probe

- Type-K T/C for use in air and non-caustic gas
- Measurement range: –50 to 800 °C
- Includes adapter U1184A for connection to DMM
- Requires module U1186A for connection to scope

Optional Accessories

U1184A Temperature probe adapter

- Mini-connector-to-banana-plug adapter for use with DMM

U1185A J-type thermocouple and adapter

- T/C adapter J/K-type
- T/C bead J-type: –20 to 200 °C

U1186A K-type thermocouple and adapter

- T/C adapter J/K-type
- T/C bead K-type: –20 to 200 °C

U1554A Hook clip for probe tip

- Rated CAT II 1000 V, CAT III 600 V

U1560A – Scope probe x1 CAT III 300 V

- Include ground alligator clip and hook clip, rated CAT III 300 V

U1561A – Scope probe x10 CAT III 600 V

- Include ground alligator clip and hook clip, rated CAT III 600 V

U1562A – Scope probe x100 CAT III 600 V

- Include ground alligator clip and hook clip, rated CAT III 600 V

U1570A AC power adapter

- Includes AC power cord based on country
- For use with U1602/04B handheld oscilloscopes

U1571A Ni-MH battery pack

- 4500 mA, 7.2 V
- For use with U1602/04B handheld oscilloscopes

U1572A Li Ion battery pack

- 4800mAh, 10.8V
- Compatible with U1610A/20A handheld oscilloscope

U1573A Desktop charger & Li Ion battery pack

- 4,800 mAh, 10.8 V
- For use with U1610A/20A handheld oscilloscope

U1574A – AC/DC adapter

- Include AC power cord based on country
- For use with U1610A/20A handheld oscilloscope

U1575A Desktop charger

- 2-output 3 A battery charger
- Dimension (H x W x D): 2.30 x 4.89 x 6.89 inches
- For use with U1610A/20A handheld oscilloscope

U1577A – USB 2.0 Cable (Type-A Plug to Type-A Plug)

- For remote control and data logging to PC

U1580A DMM terminal test lead set

- Test leads: CAT III 1000 V, CAT IV 600 V, 15 A
- Test probe (4-mm tips): CAT III 1000 V, CAT IV 600 V, 15 A
- Alligator clips: CAT III 1000 V, CAT IV 600 V, 15 A

U1583B AC current clamp

- Dual range: 40 A and 400 A
- Rated CAT III 600 V
- BNC-to-banana-plug adapter provided for use with handheld DMMs and oscilloscopes

U1586B Temperature module

- Measures –50 ~ 1000 °C
- K-type bead probe provided for use with DMMs

U1590A Soft carrying case

- Dimension (H x W x D): 9.6 x 13.0 x 4.5″
- PVC leather material
- Ideal for the U1602/04B handheld oscilloscope

U1591A Soft carrying case

- Dimension (H x W x D): 12.6 x 15.7 x 3.9"
- Soft carrying case with backpack and shoulder strap
- Ideal for the U1610/20A handheld oscilloscope

U1731P Combo Kit

Includes one U1731C handheld and four accessories:

- U5491A soft carrying case
- U5481A IR-USB cable
- U1780A AC adapter
- U1782B SMD tweezer

U1732P Combo Kit

Includes one U1732C handheld and four accessories:

- U5491A soft carrying case
- U5481A IR-USB cable
- U1780A AC adapter
- U1782B SMD tweezer

U1733P Combo Kit

Includes one U1733C handheld and four accessories:

- U5491A soft carrying case
- U5481A IR-USB cable
- U1780A AC adapter
- U1782B SMD tweezer

Optional Accessories *Continued*

U1780A AC power adapter

- Includes AC power cord based on country
- For use with U1700 series handheld capacitance/ LCR meters

U1781A Alligator clip leads

- For use with handheld capacitance and LCR meters

U1782B SMD tweezer

- Measurement Accuracy for Capacitance (Tweezers Open) <0.7pF, Resistance (Tweezers Short) <0.5Ω, Inductance (Tweezers Short) <1.2μH
- Guard ends to be connected to guard terminals of meter for better noise immunity

U5402A Yellow test lead for mA simulation

- For use with handheld multi-function calibrator/meter

U5481A IR-to-USB cable

- For remote control and data logging to PC
- Max. baud rate: 19,200 bits per second
- For use with U1700 series handheld capacitance/LCR meters and U1401A multi-function calibrator/meter

U5491A Carrying case

- Dimension (H x W x D): 8.9 x 12.2 x 3.1″
- PVC leather material
- Ideal for handheld multi-function calibrator/meter or instruments of similar size

www.agilent.com
www.agilent.com/find/goorange

For other technical literature, promotion information and online product demos, visit us at:

www.agilent.com/find/clampmeter

www.agilent.com/find/handheldlcr

www.agilent.com/find/handhelddmm

www.agilent.com/find/handheldscope

www.agilent.com/find/handheld-calibrator-meter

myAgilent

www.agilent.com/find/myagilent
A personalized view into the information most relevant to you.

www.axiestandard.org
AdvancedTCA® Extensions for Instrumentation and Test (AXIe) is an open standard that extends the AdvancedTCA for general purpose and semiconductor test. Agilent is a founding member of the AXIe consortium.

www.lxistandard.org
LAN eXtensions for Instruments puts the power of Ethernet and the Web inside your test systems. Agilent is a founding member of the LXI consortium.

www.pxisa.org
PCI eXtensions for Instrumentation (PXI) modular instrumentation delivers a rugged, PC-based high-performance measurement and automation system.

Agilent Advantage Services

Agilent Advantage Services is committed to your success throughout your equipment's lifetime. To keep you competitive, we continually invest in tools and processes that speed up calibration and repair and reduce your cost of ownership. You can also use Infoline Web Services to manage equipment and services more effectively. By sharing our measurement and service expertise, we help you create the products that change our world.

www.agilent.com/find/advantageservices

DEKRA Certified ISO 9001:2008

www.agilent.com/quality

Agilent Channel Partners

www.agilent.com/find/channelpartners
Get the best of both worlds: Agilent's measurement expertise and product breadth, combined with channel partner convenience.

For more information on Agilent Technologies' products, applications or services, please contact your local Agilent office. The complete list is available at:

www.agilent.com/find/contactus

Americas

Canada	(877) 894 4414
Brazil	(11) 4197 3600
Mexico	01800 5064 800
United States	(800) 829 4444

Asia Pacific

Australia	1 800 629 485
China	800 810 0189
Hong Kong	800 938 693
India	1 800 112 929
Japan	0120 (421) 345
Korea	080 769 0800
Malaysia	1 800 888 848
Singapore	1 800 375 8100
Taiwan	0800 047 866
Other AP Countries	(65) 375 8100

Europe & Middle East

Belgium	32 (0) 2 404 93 40
Denmark	45 45 80 12 15
Finland	358 (0) 10 855 2100
France	0825 010 700*
	*0.125 €/minute
Germany	49 (0) 7031 464 6333
Ireland	1890 924 204
Israel	972-3-9288-504/544
Italy	39 02 92 60 8484
Netherlands	31 (0) 20 547 2111
Spain	34 (91) 631 3300
Sweden	0200-88 22 55
United Kingdom	44 (0) 118 927 6201

For other unlisted countries:
www.agilent.com/find/contactus
Revised: October 11, 2012

Product specifications and descriptions in this document subject to change without notice.

© Agilent Technologies, Inc. 2013
Published in USA, February 7, 2013
5989-7340EN

Agilent Technologies