Agilent EEsof EDA

The Singly Equalized Filter Class

This document is owned by Agilent Technologies, but is no longer kept current and may contain obsolete or inaccurate references. We regret any inconvenience this may cause. For the latest information on Agilent's line of EEsof electronic design automation (EDA) products and services, please go to:

www.agilent.com/find/eesof

Agilent Technologies

The Singly Equalized Filter Class

By Randall W. Rhea
Consultant to Agilent Technologies

Abstract
For minimum-phase networks, the amplitude and phase transfer functions are dependant. Conventional filter topologies are passive ladder networks and are minimum-phase. Consequently and unfortunately, good selectivity and linear phase (flat group delay) are not achieved simultaneously. Bessel filters have flat group delay but poor selectivity, while Butterworth and Chebyshev filters have better selectivity but significant differential group delay. This article describes a filter transfer function class with selectivity similar to Butterworth and that is equalized to flat group delay using a single all-pass section. It therefore offers a compromise among selectivity, flat delay, and complexity.

Selectivity and group delay
To review the relationship between selectivity and group delay consider *Figure 1*. The upper green response is the amplitude transmission response of a seventh order Bessel lowpass filter with a 3.01 dB cutoff frequency of 1 MHz. The lower green trace is the group delay of this filter. It illustrates the flat group delay characteristics of a Bessel filter.

The upper red trace is the amplitude transmission response of a seventh order Butterworth lowpass filter with a 3.01 dB cutoff frequency of 1 MHz. Notice that the selectivity of the Butterworth is superior to that of the Bessel, but that the group-delay is not flat with frequency. The differential group delay between DC and the peak is approximately 537 nS for this Butterworth filter. Differential delay is destructive to many communications systems including radar, television, and data transmission systems.

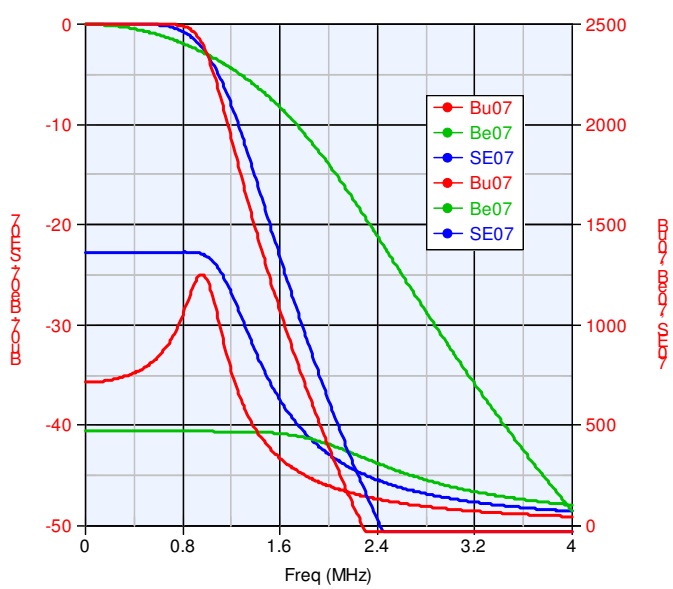

Figure 1: *Amplitude and group delay responses of seventh order lowpass filters with a cutoff frequency of 1 MHz. The green responses are Bessel, the red responses are Butterworth, and the blue responses are singly equalized.*

So how can good selectivity and low differential delay be achieved simultaneously? Interestingly, increasing the order above seventh does little to improve the selectivity of Bessel filters. This is why prototype filter tables of the Bessel do not include orders higher than 10. Poor selectivity improvement with order is illustrated in *Figure 2*. Notice that the steepness of the transition region (selectivity) increases little with increasing order, particularly near the cutoff. Through 30 dB rejection, the ninth order offers almost no advantage over seventh order.

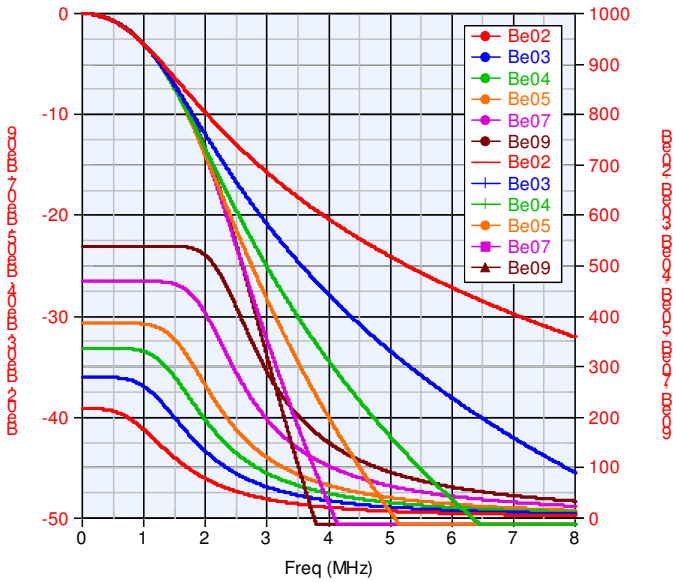

Figure 2: *Amplitude and group delay responses of Bessel lowpass filters with a cutoff frequency of 1 MHz and order 2 (in red) through order 9 (in brown).*

Table 1 gives the 3/30 dB shape factors for Bessel and Butterworth filters of orders 2 through 9. These shape factors confirm that the Bessel's selectivity improves little with high order. Also notice that the shape factor for high order Bessel is only slightly better than a third order Butterworth.

Table 1: *3/30 dB shape factors for the Bessel and Butterworth transfer functions.*

N	Bessel	Butterworth
2	7.10	5.62
3	4.36	3.16
4	3.50	2.37
5	3.13	1.99
7	2.87	1.64
9	2.82	1.24

So if increasing the order doesn't achieve better selectivity for the Bessel, what other options are available? Transitional Gaussian transfer functions offer somewhat better selectivity by

maintaining a flay-delay generating amplitude response to 6 or 12 dB and transitioning to steeper selectivity at higher frequency. Also, equal phase-error ripple transfer functions offer improved selectivity much like Chebyshev filters offer improved selectivity by allowing amplitude ripple. Lowpass prototype tables for these transfer functions are available in engineering texts [1,2,3]. Filter design programs that integrate synthesis and simulation offer an effective way to create and evaluate these alternatives [4]. Unfortunately, none of these approaches offer good selectivity and flat group delay at the same time. Simultaneously selective and flat delay filters may be synthesized with embedded left-plane zeros [5,6].

All-pass equalizer networks

A more popular method of achieving selectivity and flat delay is to cascade non-minimum phase networks with a selective filter. Non-ladder networks with bridging elements can be designed that have a flat amplitude response but also have group-delay characteristics that compensate for the differential delay of selective filters. These networks are referred to as all-pass networks. An example all-pass network is shown in *Figure 3a*.

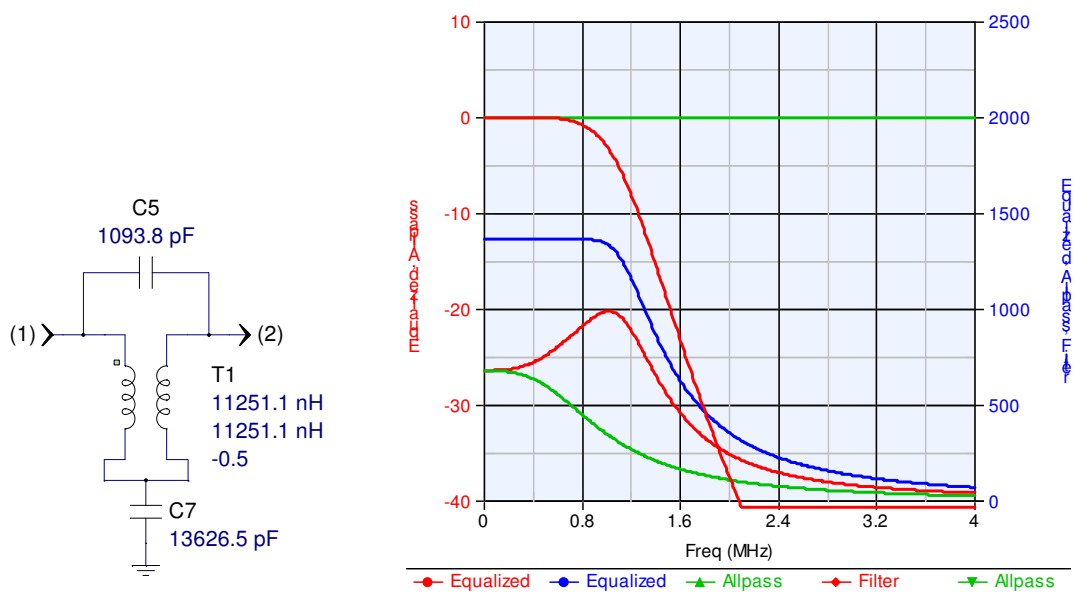

(a) (b)

Figure 3: *(a) Example all-pass network. (b) In red are the amplitude and group-delay responses of a conventional lowpass filter. In green are the responses of the all-pass network. Notice the amplitude response is all-pass. In blue is the total group delay of the filter cascaded with the all-pass network.*

The amplitude and group delay responses of a conventional filter are shown in red in *Figure 3b*. Notice the peaking of the group delay at the cutoff that is characteristic of selective transfer functions. Given in green are the amplitude and group-delay responses of the all-pass network. Notice that the amplitude response is lossless at all frequencies, thus the name all-pass. However, the group delay of the all-pass, when added with the group delay of the filter, results in flat delay. The all-pass network has equalized the differential delay of the filter.

Unfortunately, we are seldom lucky enough to achieve such perfect equalization. To flatten the group-delay of selective filters typically requires cascading many all-pass networks. Determining the parameters of each section can be tedious. The EQUALIZE module of GENESYS [4] includes

a number of alternative all-pass networks and makes quick work of finding appropriate parameters for multi-section all-pass group delay equalizers. Unfortunately, each all-pass network includes multiple elements. Element values are dependant, so all-pass networks are notoriously difficult to tune in production. Also, finite component Q introduces insertion loss in each all-pass network.

Limiting the complexity

A number of years ago [7], I wondered if it would be useful to restrict the number of all-pass sections to one and then find the most selective filter whose delay is exactly compensated. I hoped that allowing significant differential delay, but confining the shape of that delay to match a single all-pass network, would result in reasonable selectivity.

Given in blue in *Figure 1* are the amplitude and group-delay responses for a seventh order filter of this type that is cascaded with one all-pass network. Notice that the selectivity is only slightly inferior to a Butterworth. I then repeated this process by optimizing initial Butterworth filters to create single section equalized filters for orders 2 through 9. These filters were then normalized to create standard lowpass prototype tables for this new class of "singly equalized" filter. Table 2 includes normalized lowpass prototype g-values for this filter class. The last two columns in the table are the normalized frequency and Q of the second-order all-pass section required to equalize the lowpass.

Table 2: *Lowpass prototype normalized g-values for singly equalized filters for second through ninth order and the second order all-pass frequency and Q required to equalize the prototype.*

N	g(1)	g(2)	g(3)	g(4)	g(5)	g(6)	g(7)	g(8)	g(9)	Fo	Q
2	1.414	1.414								3.809	0.282
3	0.922	2.078	0.922							1.189	0.527
4	0.592	1.828	1.828	0.592						1.064	0.540
5	0.416	1.381	2.112	1.381	0.416					0.971	0.552
6	0.416	1.094	1.956	1.956	1.094	0.416				0.917	0.560
7	0.520	1.000	1.819	1.905	1.819	1.000	0.520			0.828	0.565
8	0.480	0.976	1.412	1.975	1.975	1.412	0.976	0.480		0.804	0.570
9	0.272	0.873	1.100	1.920	1.842	1.920	1.100	0.873	0.272	0.774	0.575

Extending the concept

The singly equalized filter class assumes 1) the delay is maximally flat (there is no ripple in the equalized delay), 2) there is a maximum complexity of one all-pass section, and 3) the filter amplitude response is all-pole (there are no transmission zeros in the stopband at finite frequencies). These choices result in an easily described and useful filter class, but they are arbitrary choices. For example, other choices to improve the selectivity might be to allow some ripple in the group delay, or to limit the complexity to two all-pass networks rather than one, or to allow transmission zeros at finite frequencies. In fact, by utilizing the optimization capabilities of modern, high-speed linear simulators, users are not restricted to specific transfer functions or any number of all-pass sections. A continuum of options is available.

A bandpass example of extending the concept

The process of using lowpass prototype tables -- referred to as the modern method -- is the most popular technique for designing filters today. It is based on theories developed by Darlington, Cauer, and others in the 1930s and popularized with the publication of computer-generated tables in the 1950s. When Butterworth or Chebyshev lowpass filters are transformed to bandpass filters, the amplitude characteristics are preserved. If you start with a 0.1 dB ripple Chebyshev lowpass prototype, the resulting bandpass will have 0.1 dB amplitude ripple in the passband. Unfortunately, the bandpass transform disturbs the phase attributes of all lowpass prototypes. A flat delay Bessel lowpass prototype that is transformed to a bandpass will not possess flat delay.

This example bandpass filter begins with a custom synthesized 908 to 1092 kHz bandpass with one stopband transmission zero (TZ) at DC, three at infinity, one finite-frequency TZ below the passband, and one above the passband. The ratio of three TZs at infinity to one at DC results in a symmetric amplitude and group-delay response that is easier to equalize [8]. The finite-frequency TZs result in improved selectivity.

To design this equalized filter, using GENESYS [4], the bandpass was synthesized with a maximally flat amplitude passband (Butterworth) and the specified TZs. Next a single section all-pass network was used to equalize the group delay. This resulted in significant group delay ripple. Finally, the filter values were optimized to flatten the group-delay. This resulted in a slight reduction of the selectivity. The final schematic is given in *Figure 4*, and the amplitude and group delay responses are given in *Figure 5*.

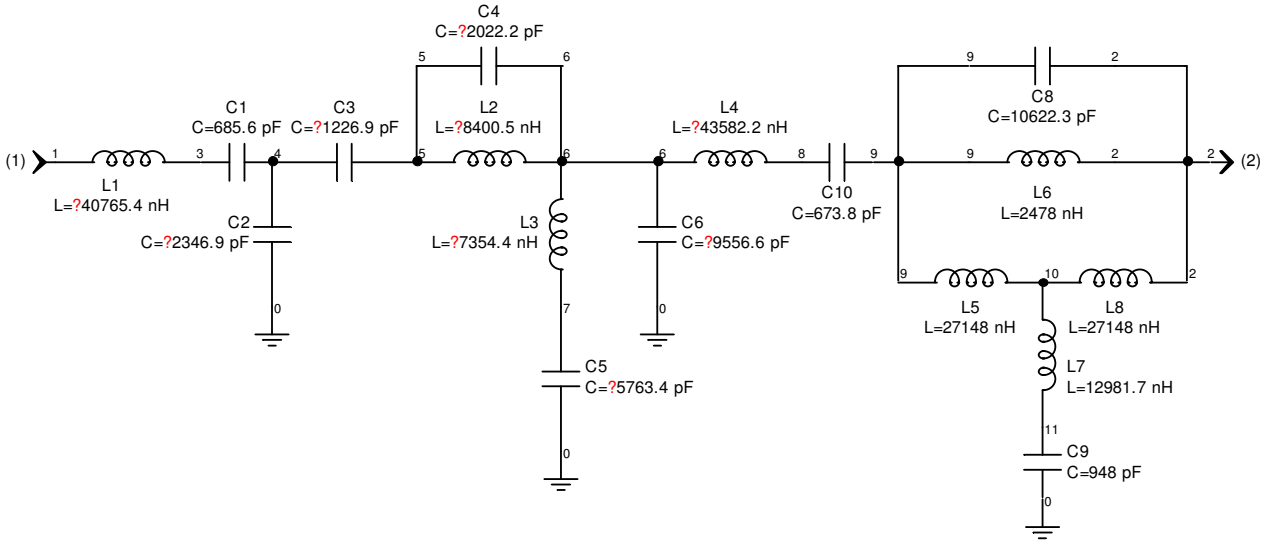

Figure 4: *Schematic of a 908 to 1092 kHz custom bandpass filter equalized with one all-pass network.*

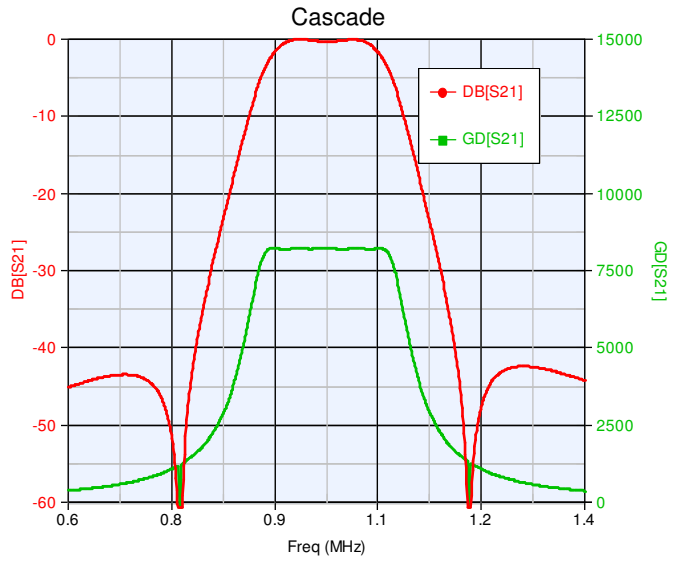

Figure 5: *The amplitude and group-delay responses of the equalized bandpass filter in* Figure 4.

In summary, the singly equalized filter class offers flat delay and improved selectivity over the Bessel. The techniques used to create this class are extensible to other designs to help satisfy custom performance requirements.

References

[1] H.J. Blinchikoff and A.J. Zverev, *Filtering in the Time and Frequency Domain*, Noble Publishing, Thomasville, Georgia, 2001.
[2] A.B. Williams and F.J. Taylor, *Electronic Filter Design Handbook*, 2nd ed., McGraw-Hill, New York, 1988.
[3] R. Rhea, *HF Filter Design and Computer Simulation*, 1994, Noble Publishing, Thomasville, Georgia
[4] *GENESYS Operation Manuals*, Agilent Technologies, Norcross, Georgia, www.eagleware.com.
[5] R. Lerner, Bandpass Filters with Linear Phase, *Proc. IEEE*, March 1964, pp. 249-268
[6] J.D. Rhodes and I.H. Zabalawi, Selective Linear Phase Filters Possessing a Pair of j-Axis Transmission Zeros, *Circuit Theory and Applications*, Vol 10, 1982, pp. 251-263.
[7] R. Rhea, Singly-Equalized Filters, *RF Design*, October 1990, pp. 51-52.
[8] R. Rhea, Exploiting Filter Symmetry, *Microwave Journal*, March, 2001.

For more information about Agilent EEsof EDA, visit:

www.agilent.com/find/eesof

Agilent Email Updates

www.agilent.com/find/emailupdates
Get the latest information on the products and applications you select.

Agilent Direct

www.agilent.com/find/agilentdirect
Quickly choose and use your test equipment solutions with confidence.

www.agilent.com

For more information on Agilent Technologies' products, applications or services, please contact your local Agilent office. The complete list is available at:

www.agilent.com/find/contactus

Americas

Canada	(877) 894-4414
Latin America	305 269 7500
United States	(800) 829-4444

Asia Pacific

Australia	1 800 629 485
China	800 810 0189
Hong Kong	800 938 693
India	1 800 112 929
Japan	0120 (421) 345
Korea	080 769 0800
Malaysia	1 800 888 848
Singapore	1 800 375 8100
Taiwan	0800 047 866
Thailand	1 800 226 008

Europe & Middle East

Austria	0820 87 44 11
Belgium	32 (0) 2 404 93 40
Denmark	45 70 13 15 15
Finland	358 (0) 10 855 2100
France	0825 010 700*
	*0.125 €/minute
Germany	01805 24 6333**
	**0.14 €/minute
Ireland	1890 924 204
Israel	972-3-9288-504/544
Italy	39 02 92 60 8484
Netherlands	31 (0) 20 547 2111
Spain	34 (91) 631 3300
Sweden	0200-88 22 55
Switzerland	0800 80 53 53
United Kingdom	44 (0) 118 9276201

Other European Countries:
www.agilent.com/find/contactus

Revised: March 27, 2008

Product specifications and descriptions in this document subject to change without notice.

© Agilent Technologies, Inc. 2008

Printed in USA, January 04, 2006
5989-9464EN

Agilent Technologies