Agilent EEsof EDA

Phased Locked Loop Acquisition Using a Swept Local Oscillator

This document is owned by Agilent Technologies, but is no longer kept current and may contain obsolete or inaccurate references. We regret any inconvenience this may cause. For the latest information on Agilent's line of EEsof electronic design automation (EDA) products and services, please go to:

www.agilent.com/find/eesof

Agilent Technologies

Phased Locked Loop Acquisition Using a Swept Local Oscillator

Maurice L. Schiff, Ph.D.,Chief Scientist, ELANIX, Inc.

Introduction

Phased lock loops are used extensively in communication systems to generate CW sources or to demodulate FM signals. One problem that faces the PLL designer is when there can be a large unknown frequency offset of the received signal relative to the nominal frequency of the VCO. This offset can be caused by Doppler effects if the transmitter or receiver is on a moving platform, or just drifts in the quiescent frequencies of the VCOs involved. In this note, we explore one method for achieving lock over a wide range of unknown input frequency. Normally such wide acquisition requires a wide loop bandwidth which has poor tracking capabilities. In the method described here, we achieve rapid lock with a narrow tracking bandwidth.

System Design

The basic system design (swept_lo.svu) is shown in **Figure 1** which is a block diagram using the SystemView simulation software.

In the system described in **Figure 1**, the nominal frequency of the VCO is 10 MHz while the input tone is at 25 MHz. The loop filter block diagram is shown in **Figure 2**, and **Figure 3** is the s domain transfer function, and **Figure 4** shows the Bode plot. This filter is commonly employed in practice.

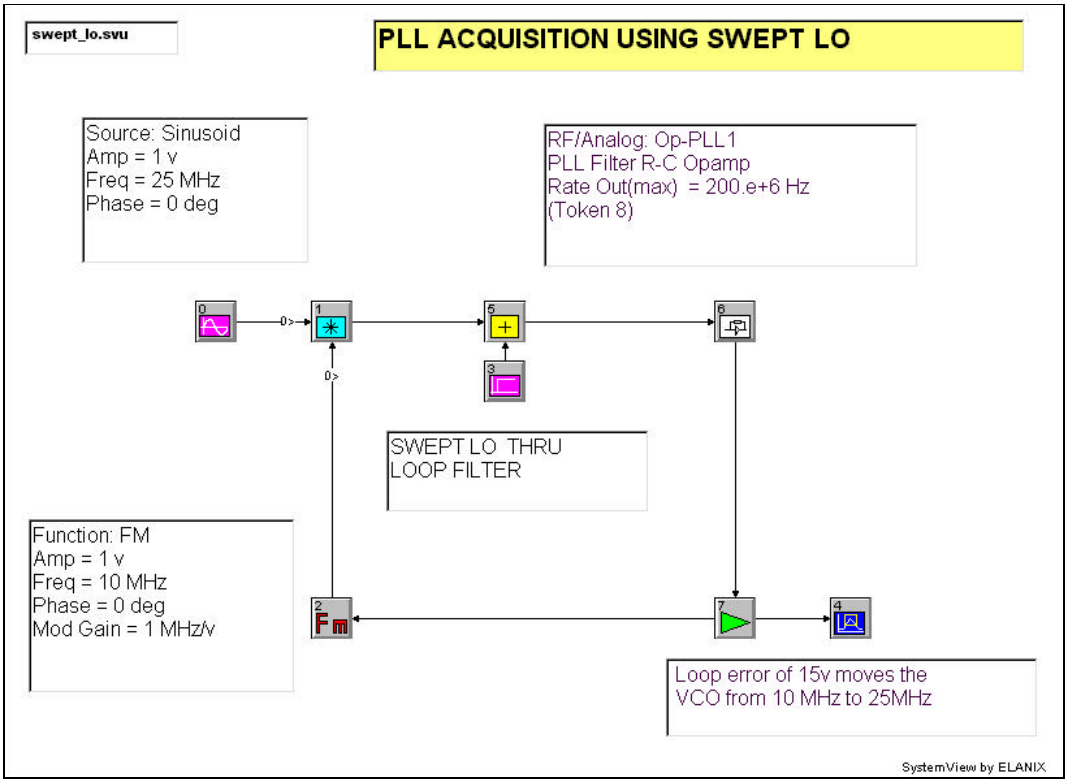

Figure1. Swept LO PLL Block Diagram

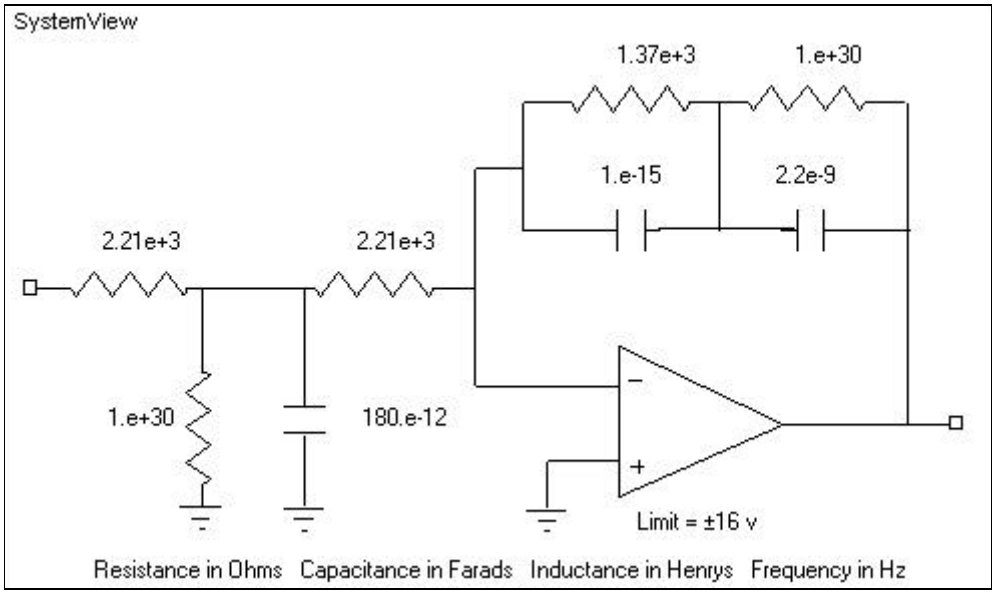

Figure 2. PLL Loop Filter

H(S) Numerator		H(S) Denominator	
S^0 :	226.244343891403e+24	S^0 :	1
S^1 :	681.900762443439e+18	S^1 :	2.2e+21
S^2 :	0	S^2 :	437.583014e+12
S^3 :	0	S^3 :	599.4846

Figure 3. Laplace Domain Transfer Function of Loop Filter

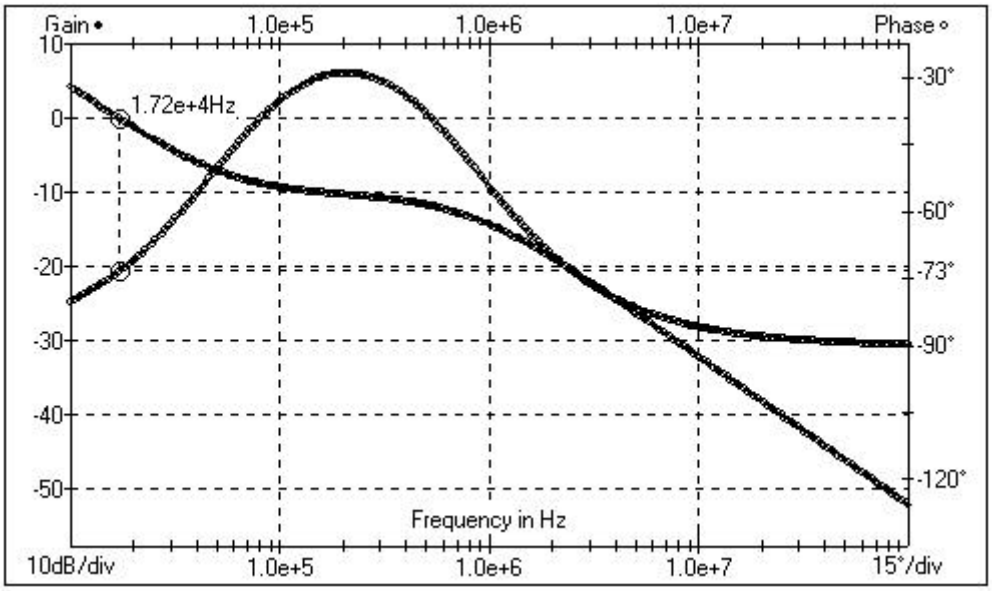

Figure 4. Loop Filter Bode Plot

In the block diagram of **Figure 1**, we have added a -250 e-3 volt step input to the phase detector output before the loop filter. By simulation it is easy to show that if the step function is set to 0.0 volts, this loop will not lock. The loop filter, to the first approximation, acts as an integrator. Thus the step function output of the filter produces a sweep ramp into the VCO. When the VCO frequency nears 25 MHz it locks.

The larger the step function, the faster the lock time. However, if the step is too large the sweep 'passes' right through 25 MHz and lock is not achieved. The maximum sweep rate as well as all other loop parameters for optimum operation can be determined from the simulation. **Figure 5** shows the output of the loop filter during acquisition.

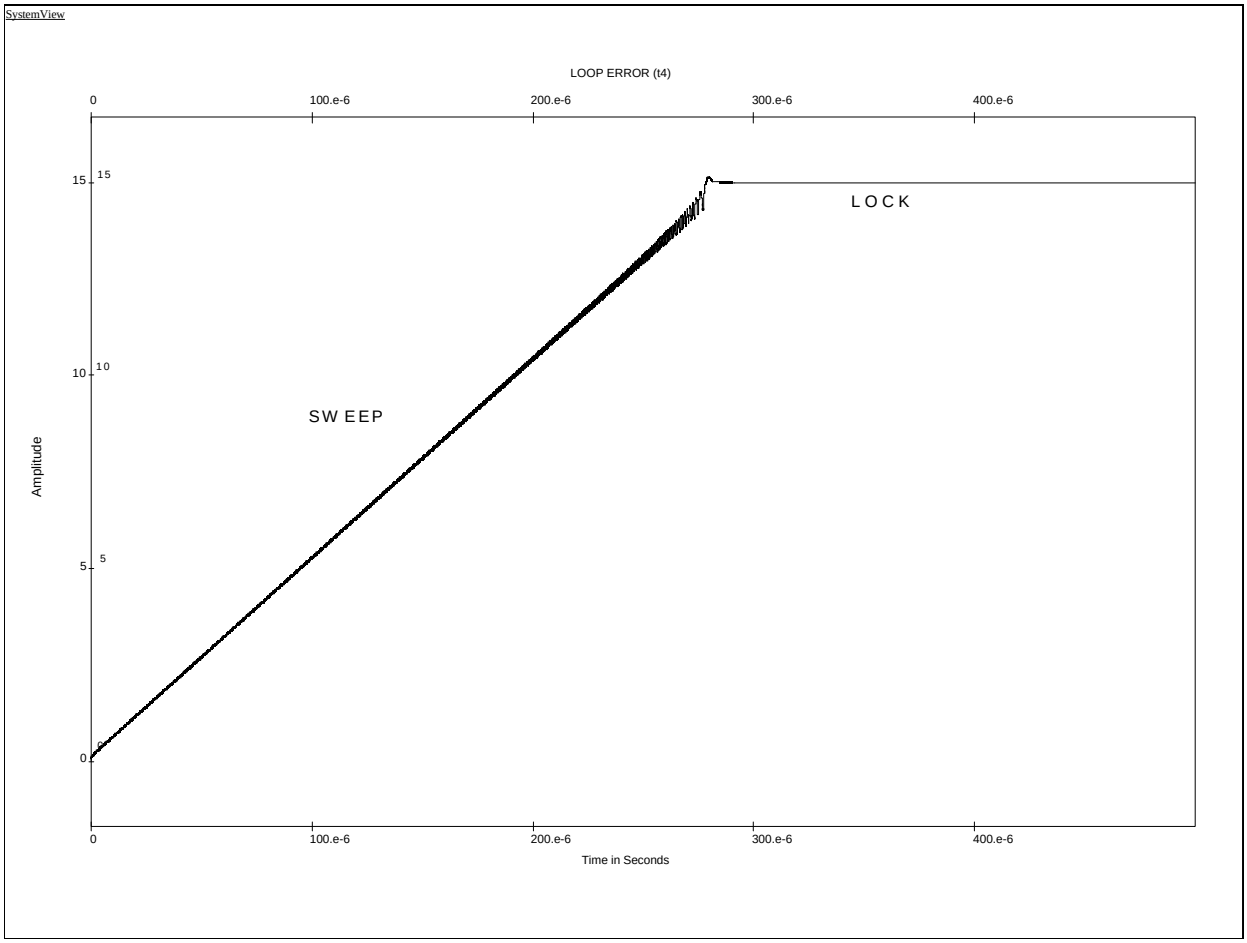

Figure 5 Loop Filter Output Showing Swept Acquisition

Finally, once the system is in lock, the tracking performance is determined by the standard closed loop bandwidth as determined by the component gains and the loop filter. These parameters can be set for any desired conditions independent of the swept locking rate.

For more information on SystemView simulation software please contact:

ELANIX, Inc.
5655 Lindero Canyon Road, Suite 721
Westlake Village CA 91362
Tel: (818) 597-1414
Fax: (818) 597-1427

Visit our web home page (www.elanix.com) to download an evaluation version of the software that can run this simulation as well as other user entered designs.

For more information about Agilent EEsof EDA, visit:

www.agilent.com/find/eesof

Agilent Email Updates

www.agilent.com/find/emailupdates
Get the latest information on the products and applications you select.

Agilent Direct

www.agilent.com/find/agilentdirect
Quickly choose and use your test equipment solutions with confidence.

www.agilent.com

For more information on Agilent Technologies' products, applications or services, please contact your local Agilent office. The complete list is available at:

www.agilent.com/find/contactus

Americas

Canada	(877) 894-4414
Latin America	305 269 7500
United States	(800) 829-4444

Asia Pacific

Australia	1 800 629 485
China	800 810 0189
Hong Kong	800 938 693
India	1 800 112 929
Japan	0120 (421) 345
Korea	080 769 0800
Malaysia	1 800 888 848
Singapore	1 800 375 8100
Taiwan	0800 047 866
Thailand	1 800 226 008

Europe & Middle East

Austria	0820 87 44 11
Belgium	32 (0) 2 404 93 40
Denmark	45 70 13 15 15
Finland	358 (0) 10 855 2100
France	0825 010 700*
	*0.125 €/minute
Germany	01805 24 6333**
	**0.14 €/minute
Ireland	1890 924 204
Israel	972-3-9288-504/544
Italy	39 02 92 60 8484
Netherlands	31 (0) 20 547 2111
Spain	34 (91) 631 3300
Sweden	0200-88 22 55
Switzerland	0800 80 53 53
United Kingdom	44 (0) 118 9276201

Other European Countries:
www.agilent.com/find/contactus

Revised: March 27, 2008

Product specifications and descriptions in this document subject to change without notice.

© Agilent Technologies, Inc. 2008

Printed in USA, March 02, 2000
5989-9511EN

Agilent Technologies