Migrating from the Agilent 4268A/4288A Capacitance Meter to the Agilent E4981A Capacitance Meter

Technical Overview

E4981A Capacitance Meter

The E4981A capacitance meter provides the best combination of accuracy, measurement speed, and a wide range of ceramic capacitor measurements. The E4981A replaces the 4268A 120 Hz/1 kHz and the 4288A 1 kHz/1 MHz capacitance meters. The E4981A includes the same functionality, SCPI commands, and user interface which makes migration quite easy. This document provides all the information you need to migrate to the E4981A.

Agilent Technologies

Measurement Time Comparison

The 4268A has three measurement speeds (short, medium, long) and the 4288A has two measurement speeds (short and long), compared to the E4981A which has five measurement speeds (n = 1, 2, 4, 6 and 8). The measurement time is defined as the time from trigger to the end of measurement.

Table 1. E4981A measurement time

n	1	2	4	6	8
1 MHz	2.3 ms	3.3 ms	5.3 ms	7.3 ms	9.3 ms
1 kHz	3 ms	4 ms	6 ms	8 ms	10 ms
120 Hz	11 ms	19.3 ms	35.9 ms	52.5 ms	69.1 ms

1. Tolerance = ± 0.5 ms

Table 2. 4268A measurement time

4268A	Short	Medium	Long
120 Hz/1 kHz	22.5 ms	40.5 ms	54 ms

1. Tolerance = ± 2.5 ms

Table 3. 4288A measurement time

4288A	Short	Long
1 kHz/1 MHz	6.5 ms	16.5 ms

1. Tolerance = ± 0.5ms

Accuracy Comparison

Comparison with the 4288A

The accuracy of the E4981A is the same as the 4288A. The 4288A has two measurement speeds (short and long), while the E4981A has five measurement speeds (n = 1, 2, 4, 6 and 8). The accuracy at short on the 4288A is the same as 1 on the E4981A. The accuracy at long on the 4288A is the same as 8 on the E4981A. The accuracy calculation formula is the exactly same for both products. The measurement range for both is the same at 1 MHz and there are no 22 µF, 47 µF and 100 µF ranges at 1 kHz for the 4288A.

Table 4. Capacitance Accuracy at 1 MHz

Cp, Cs [%]						
Meas time	4288A	SHORT	NA	NA	NA	LONG
	E4981A	1	2	4	6	8
Range	1 pF	0.055 + 0.070 × K	0.055 + 0.047 × K	0.055 + 0.036 × K	0.055 + 0.033 × K	0.055 + 0.030 × K
	2.2 pF	0.055 + 0.045 × K	0.055 + 0.032 × K	0.055 + 0.025 × K	0.055 + 0.022 × K	0.055 + 0.020 × K
	4.7 pF	0.055 + 0.030 × K	0.055 + 0.022 × K	0.055 + 0.018 × K	0.055 + 0.016 × K	0.055 + 0.015 × K
	10 pF					
	22 pF					
	47 pF					
	100 pF					
	220 pF					
	470 pF					
	1 nF					

1. K = (1/Vs) × (Cr/Cx) when Cx = < Cr, K = 1/Vs when Cx >Cr (Cr: range, Cx: measured capacitance)

Table 5. Dissipation Factor Accuracy at 1 MHz

D						
Meas time	4288A	SHORT	NA	NA	NA	LONG
	E4981A	1	2	4	6	8
Range	1 pF	0.00035 + 0.00070 × K	0.00035 + 0.00047 × K	0.00035 + 0.00036 × K	0.00035 + 0.00033 × K	0.00035 + 0.00030 × K
	2.2 pF	0.00035 + 0.00045 × K	0.00035 + 0.00032 × K	0.00035 + 0.00032 × K	0.00035 + 0.00022 × K	0.00035 + 0.00020 × K
	4.7 pF	0.00035 + 0.00030 × K	0.00035 + 0.00022 × K	0.00035 + 0.00018 × K	0.00035 + 0.00016 × K	0.00035 + 0.00015 × K
	10 pF					
	22 pF					
	47 pF					
	100 pF					
	220 pF					
	470 pF					
	1 nF					

1. *K = (1/Vs) × (Cr/Cx) when Cx = < Cr, K = 1/Vs when C x > Cr (Cr: range, Cx: measured capacitance)*

Table 6. Capacitance Accuracy at 1 kHz

Cp, Cs [%]						
Meas time	4288A	SHORT	NA	NA	NA	LONG
	E4981A	1	2	4	6	8
Range	100 pF	0.055 + 0.070 × K	0.055 + 0.047 × K	0.055 + 0.036 × K	0.055 + 0.033 × K	0.055 + 0.030 × K
	220 pF	0.055 + 0.045 × K	0.055 + 0.032 × K	0.055 + 0.025 × K	0.055 + 0.022 × K	0.055 + 0.020 × K
	470 pF	0.055 + 0.030 × K	0.055 + 0.022 × K	0.055 + 0.018 × K	0.055 + 0.016 × K	0.055 + 0.015 × K
	1 nF					
	2.2 nF					
	4.7 nF					
	10 nF					
	22 nF					
	47 nF					
	100 nF					
	220 nF					
	470 nF					
	1 µF					
	2.2 µF					
	4.7 µF					
	10 µF					
	22 µF	0.4 + 0.060 × K	0.4 + 0.044 × K	0.4 + 0.036 × K	0.4 + 0.032 × K	0.4 + 0.030 × K
	47 µF					
	100 µF					

1. *K = (1/Vs) × (Cr/Cx) when Cx = < Cr, K = 1/Vs when Cx > Cr (Cr: range, Cx: measured capacitance)*

Table 7. Dissipation Factor Accuracy at 1 kHz

D						
Meas time	4288A	SHORT	NA	NA	NA	LONG
	E4981A	1	2	4	6	8
Range	100 pF	0.00035 + 0.00070 × K	0.00035 + 0.00047 × K	0.00035 + 0.00036 × K	0.00035 + 0.00033 × K	0.00035 + 0.00030 × K
	220 pF	0.00035 + 0.00045 × K	0.00035 + 0.00032 × K	0.00035 + 0.00025 × K	0.00035 + 0.00022 × K	0.00035 + 0.00020 × K
	470 pF	0.00035 + 0.00030 × K	0.00035 + 0.00022 × K	0.00035 + 0.00018 × K	0.00035 + 0.00016 × K	0.00035 + 0.00015 × K
	1 nF					
	2.2 nF					
	4.7 nF					
	10 nF					
	22 nF					
	47 nF					
	100 nF					
	220 nF					
	470 nF					
	1 µF					
	2.2 µF					
	4.7 µF					
	10 µF					
	22 µF	0.004 + 0.060000 × K	0.004 + 0.00044 × K	0.004 + 0.00036 × K	0.004 + 0.00032 × K	0.004 + 0.00030 × K
	47 µF					
	100 µF					

1. K = (1/Vs) × (Cr/Cx) when Cx = < Cr, K = 1/Vs when Cx > Cr (Cr: range, Cx: measured capacitance)

Comparison with the 4268A

The accuracy of the E4981A is much improved from the 4268A. The 4268A has three measurement speeds (short, medium, long), where as the E4981A has five measurement speeds (n = 1, 2, 4, 6 and 8). The accuracy calculation formula is different for both products.

Table 8. E4891A Capacitance Accuracy at 1 kHz

E4981A -Cp, Cs [%]						
Meas time		1	2	4	6	8
Range	100 pF	0.055 + 0.070 × K	0.055 + 0.047 × K	0.055 + 0.036 × K	0.055 + 0.033 × K	0.055 + 0.030 × K
	220 pF	0.055 + 0.045 × K	0.055 + 0.032 × K	0.055 + 0.025 × K	0.055 + 0.022 × K	0.055 + 0.020 × K
	470 pF	0.055 + 0.030 × K	0.055 + 0.022 × K	0.055 + 0.018 × K	0.055 + 0.016 × K	0.055 + 0.015 × K
	1 nF					
	2.2 nF					
	4.7 nF					
	10 nF					
	22 nF					
	47 nF					
	100 nF					
	220 nF					
	470 nF					
	1 µF					
	2.2 µF					
	4.7 µF					
	10 µF					
	22 µF	0.4 + 0.060 × K	0.4 + 0.044 × K	0.4 + 0.036 × K	0.4 + 0.032 × K	0.4 + 0.030 × K
	47 µF					
	100 µF					

1. K = (1/Vs) × (Cr/Cx) when Cx = < Cr, K = 1/Vs when Cx > Cr (Cr: range, Cx: measured capacitance)

Table 9. E4981A Dissipation Factor Accuracy at 1 kHz

E4981A -D						
Meas time		1	2	4	6	8
Range	100 pF	0.00035 + 0.00070 × K	0.00035 + 0.00047 × K	0.00035 + 0.00036 × K	0.00035 + 0.00033 × K	0.00035 + 0.00030 × K
	220 pF	0.00035 + 0.00045 × K	0.00035 + 0.00032 × K	0.00035 + 0.00025 × K	0.00035 + 0.00022 × K	0.00035 + 0.00020 × K
	470 pF	0.00035 + 0.00030 × K	0.00035 + 0.00022 × K	0.00035 + 0.00018 × K	0.00035 + 0.00016 × K	0.00035 + 0.00015 × K
	1 nF					
	2.2 nF					
	4.7 nF					
	10 nF					
	22 nF					
	47 nF					
	100 nF					
	220 nF					
	470 nF					
	1 µF					
	2.2 µF					
	4.7 µF					
	10 µF					
	22 µF	0.004 + 0.00060 × K	0.004 + 0.00044 × K	0.004 + 0.00036 × K	0.004 + 0.03002 × K	0.004 + 0.00030 × K
	47 µF					
	100 µF					

1. K = 1/Vs) × (Cr/Cx) when Cx = < Cr, K = 1/Vs when Cx > Cr (Cr: range, Cx: measured capacitance)

Table 10. 4268A Capacitance and Dissipation Factor Accuracy at 1 kHz

4268A -Cp, Cs [%]				
Meas time		SHORT	MED	LONG
Range	1 nF	0.018 + 0.062 × B	0.14 + 0.052 × B	0.14 + 0.049 × B
	10 nF	0.018 + 0.041 × B	0.14 + 0.036 × B	0.14 + 0.035 × B
	100 nF			
	1 µF			
	10 µF	0.18 + 0.041 × B + 377 × Cx	0.18 + 0.036 × B + 377 × Cx	0.18 + 0.035 × B + 377 × Cx
	100 µF	0.4 + 0.066 × B + 377 × Cx	0.4 + 0.049 × B + 377 × Cx	0.4 + 0.044 × B + 377 × Cx

1. B = Cr/Cx when Cr < = 10µF, B = Cr/Cx + Cx/Cr when Cr = 100µF (Cr: range, Cx: measured capacitance), D = Cp,Cs/100 (D < 0.1 and Cp,Cs = < 10%)

For detailed 4268A specifications, see the 4268A operation manual.

Table 11. E4981A Capacitance Accuracy at 120 Hz

E4981A -Cp, Cs [%]						
Meas time		1	2	4	6	8
Range	10 nF	0.055 + 0.030 × K	0.055 + 0.022 × K	0.055 + 0.018 × K	0.055 + 0.016 × K	0.055 + 0.015 × K
	22 nF					
	47 nF					
	100 nF					
	220 nF					
	470 nF					
	1µF					
	2.2 µF					
	4.7 µF					
	10 µF					
	22 µF					
	47 µF					
	100 µF					
	220 µF	0.4 + 0.060 × K	0.4 + 0.044 × K	0.4 + 0.036 × K	0.4 + 0.032 × K	0.4 + 0.030 × K
	470 µF					
	1 mF					

1. K = (1/Vs) × (Cr/Cx) when Cx = < Cr, K = 1/Vs when Cx > Cr (Cr: range, Cx: measured capacitance)

Table 12. E4891A Dissipation Factor Accuracy at 120 Hz

E4981A -D						
Meas time		1	2	4	6	8
Range	10 nF	0.00035 + 0.00030 × K	0.00035 + 0.00022 × K	0.00035 + 0.00018 × K	0.00035 + 0.00016 × K	0.00035 + 0.00015 × K
	22 nF					
	47 nF					
	100 nF					
	220 nF					
	470 nF					
	1µF					
	2.2 µF					
	4.7 µF					
	10 µF					
	22 µF					
	47 µF					
	100 µF					
	220 µF	0.004 + 0.00060 × K	0.004 + 0.00044 × K	0.004 + 0.00036 × K	0.004 + 0.00032 × K	0.004 + 0.00030 × K
	470 µF					
	1 mF					

1. K = (1/Vs) × (Cr/Cx) when Cx = < Cr, K = 1/Vs when Cx > Cr (Cr: range, Cx: measured capacitance)

Table 13. 4268A Capacitance and Dissipation Factor Accuracy at 120 Hz

4268A -Cp, Cs [%]				
Meas time		SHORT	MED	LONG
Range	10 nF	0.28 + 0.1 × B	0.14 + 0.05 × B	0.14 + 0.05 × B
	100 nF	0.28 + 0.077 × B	0.14 + 0.037 × B	0.14 + 0.035 × B
	1 µF	0.28 + 0.077 × B	0.16 + 0.037 × B	0.16 + 0.035 × B
	10 µF	0.28 + 0.077 × B	0.16 + 0.037 × B	0.14 + 0.035 × B
	100 µF	0.4 + 0.077 × B + 45.2 × Cx	0.4 + 0.037 × B + 45.2 × Cx	0.4 + 0.035 × B + 45.2 × Cx
	100 µF	0.8 + 0.106 × B + 45.2 × Cx	0.8 + 0.052 × B + 45.2 × Cx	0.8 + 0.045 × B + 45.2 × Cx

1. B = Cr/Cx when Cr < = 10µF, B = Cr/Cx + Cx/Cr when Cr = 100µF (Cr: range, Cx: measured capacitance),
D = Cp,Cs/100 (D < 0.1 and Cp,Cs = < 10%)

For detailed specifications, see the 4268A operation manual.

Handler Interface Comparison

Electrical characteristics comparison

The handler interface is compatible with the 4268A/4288A. When using the 4268A/4288A handler interface at the factory setting, you can use the E4981A without any modification. The difference points are shown in the Table 14.

Table 14. Electrical Characteristics Comparison

Items	E4981A		4268A/4288A		
Pull-up resistor	The pull-up resistor should be connected to the exterior of the E4981A. The pull-up resistor can not be placed on the internal board.		The pull-up resistor can be connected either internal or to the exterior of the unit.		
EXT_ DCV1	EXT_DCV1 pin is deleted because of the voltage input for the internal pull-up resistor.		EXT_DCV1 is available.		
Voltage setting for EXT_ DCV	The SCPI command of:SYSTem: HANDler:TRIGger:VOLTage is used to select the voltage .		The bit switch (S2 for 4268A, S1 for 4288A) on the board is used to select the voltage.		
	DCV2 Voltage	Input Resistor (See Figure 1)	DCV2 Voltage	4268A	4288A
	5V ≤ DCV2 ≤ 9 V	1 kΩ	5 V ≤ DCV2 ≤ 6 V	1 kΩ	1 kΩ
			6 V < DCV2 ≤ 9 V	1.21 kΩ	1.3 kΩ
	9V < DCV2 ≤ 15 V	2.27 kΩ	9V < DCV2 ≤ 15 V	2.32 kΩ	2.27 kΩ
	15 V < DCV2 ≤ 24 V	3.68 kΩ	15 V <DCV2 ≤ 24 V	NA	3.65 kΩ
Internal +12 V/ +5 V	Internal +5 V/+12 V is not available. (+5 V on pins 16, 17 and 18 are available)		Internal +5 V/+12 V is available when the pull-up resistor is placed on the internal board.		
COM1/ COM2	COM1/COM2 is always isolated from E4981A common. When you want to connect COM1/COM2 with E4981A common, connect COM1/COM2 with the outer grand of the handler connector.		COM1/COM2 can be connected with 4268A/4288A common by selecting the switch on the board.		

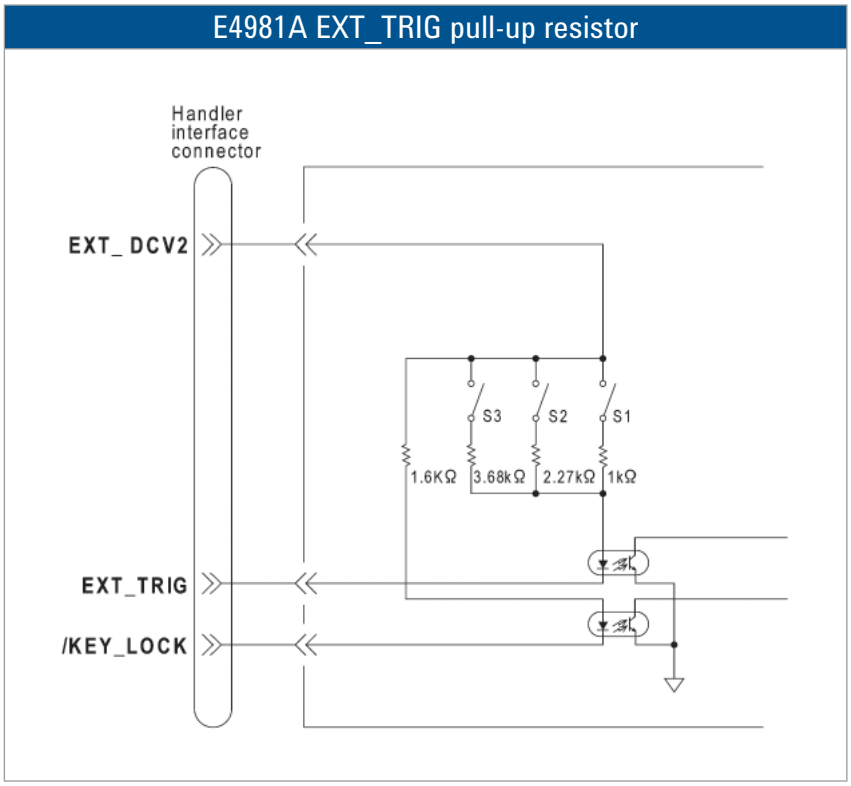

Figure 1. E4981A EXT_TRIG pull-up resistor

Handler interface pin assignment comparison

Table 15. Handler interface pin assignment comparison

Pin no.	E4981A	4268A	4288A
1	/BIN1		
2	/BIN2		
3	/BIN3		
4	/BIN4		
5	/BIN5		
6	/BIN6		
7	/BIN7		
8	/BIN8		
9	/BIN9		
10	/OUT_OF_BIN		
11	/AUX_BIN		
12, 13	/EXT_TRIG		
14, 15	EXT_DCV2		
16, 17, 18	+5 V		
19	/PHI		
20	/PLO		
21	/SREJ		
22	/READY_FOR_TRIG	(reserved)	/READY_FOR_TRIG
23	/LOWC_OR_NC	/NO_CONTACT	/LOW_C_REJECT
24	/OVLD		
25	/KEY_LOCK		
26	(reserved)		
27,28	(reserved)	EXT_DCV1	
29	/ALARM		
30	/INDEX		
31	/EOM		
32,33	COM2		
34,35,36	COM1		

Measurement Speed (Detailed)

The following chart shows the detailed measurement speed comparison.

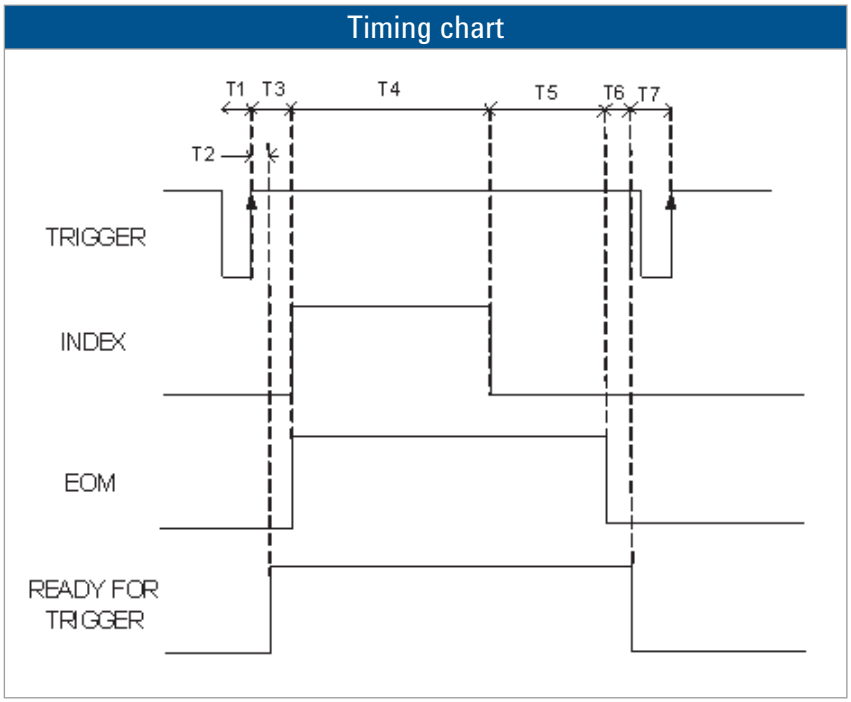

Figure 2. Timing chart

Table 16. Timing chart

T	Description		E4981A	4268A	4288A
T1	Trigger pulse width		1µs minimum	1µs minimum	1µs minimum
T2	Trigger response time of /READY_FOR_TRIG		40 µs	NA	200 µs
T3	Measurement time (T3+T4+T5)	Trigger response time of /INDEX and /EOM	40 µs	600 µs	250 µs
T4		Analog measurement time (/INDEX)	Depending on the setting of measurement speed. See the table below		
T5		Measurement computation time	1.0 ms	5.0 ms	2.0 ms
T6	READY_FOR_TRIG setup time		0 µs	NA	15 µs
T7	Trigger wait time		0 µs	0 (T6+T7)	0 µs

1. *The 4268A has no READY_FOR_TRIG signal.*
2. *In the E4981A, READY_FOR_TRIG and EOM are identical. The output signals are the same when :the :INITiate:CONTinuous command is set at ON*

Condition:

1. *Display update: OFF*
2. *Measurement range mode: Hold*
3. *Trigger delay and source delay: 0 ms*
4. *Averaging factor: 1*
5. *Open/short/load compensation: ON*
6. *Bin sorting (comparator) : ON*
7. *Status register update: ON*

Table 17. Analog measurement time comparison

E4981A					
n	1	2	4	6	8
1 MHz	1.3 ms	2.3 ms	4.3 ms	6.3 ms	8.3 ms
1 kHz	2 ms	3 ms	5 ms	7 ms	9 ms
120 Hz	10 ms	18.3 ms	34.9 ms	51.5 ms	68.1 ms

4268A	Short	Medium	Long
120 Hz/1 kHz	16.9 ms	34.9 ms	48.4 ms

4288A	Short	Long
1 kHz/1 MHz	4.5 ms	14.5 ms

New functions to improve the measurement speed for the E4981A

The E4981A has the capability to shorten the measurement speed.

Turning off status register update

When the status register is not used, the measurement computation time (T5) can became 0.7ms. (T5 is 1 ms at ON.) To turn off the status register, use the SCPI command of "STATus:OPERation:UPDate". Refer to the E4981A programming manual.

Reducing the waiting time for analog measurements

The E4981A has the capability to reduce the waiting time for analog measurements. The waiting time shown below is included in the analog measurement time (T4). This is the system default measurement delay time.

	120 Hz	1 kHz	1 MHz
Default waiting time	1.67 ms	1.00 ms	0.27 ms

When the waiting time is reduced, the measurement accuracy is not applied. To reduce the waiting time, use the SCPI command of [SENSe]:DETector:DELay [1-3]. Refer to the E4981A programming manual.

Scanner Interface Comparison

The scanner interface is compatible with the 4268A/4288A. When using the 4268A/4288A scanner interface at the factory setting, you can use the E4981A without any modification. The difference points are shown in Table 18.

Table18. Electrical characteristics comparison

Items	E4981A		4268A/4288A		
Number of channels	256		64		
Internal pull-up resistor	The internal pull-up resistor is 820 Ω for the full range 0 V to 15 V.		The internal pull-up resistor can be selected up on the EXT_DCV voltage. 4268A 0 V to 8 V: 422 Ω 8 V to 15 V: 844 Ω 4288A 0 V to 8 V: 410 Ω 8 V to 15 V: 820 Ω		
Voltage setting for EXT_DCV	The SCPI command of:SYSTem: SCANner:TRIGger: VOLTage is used to select the voltage. The default setting of command is 9 to 15 V.		The bit switch (S3) on the board is used to select the voltage. The factory default is 9 to 15 V setting.		
	DCV2 Voltage	E4981A	DCV2 Voltage	4268A	4288A
	5V ≤ DCV ≤ 9 V	1 kΩ	5V ≤ DCV ≤ 6 V	1 kΩ	1 kΩ
	9V < DCV ≤ 15 V	2.27 kΩ	6V < DCV ≤ 9 V	1.21 kΩ	1.3 kΩ
			9V < DCV ≤ 15 V	2.32 kΩ	2.27 kΩ

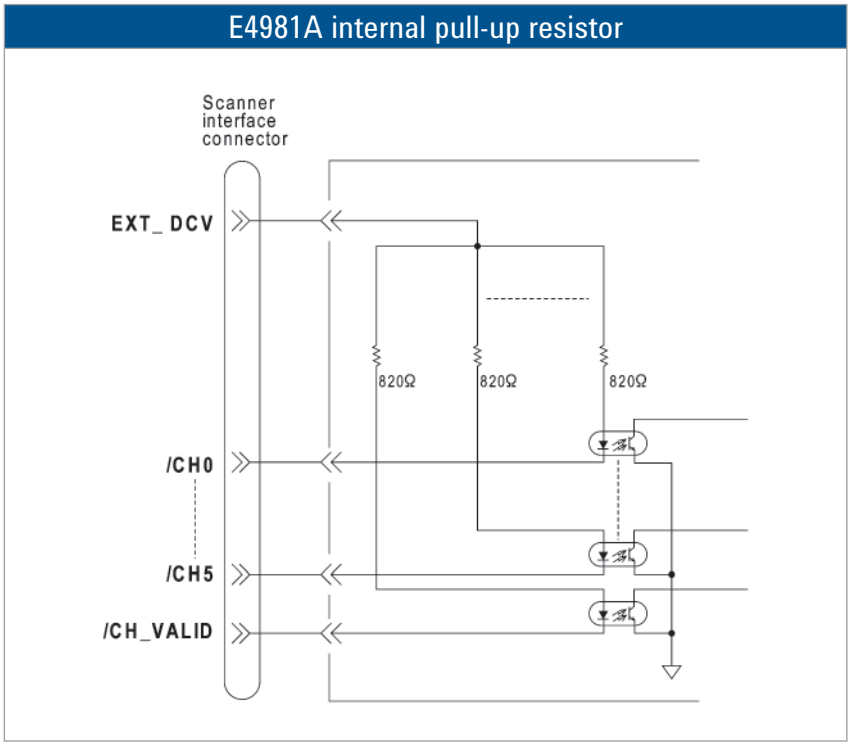

Figure 3. E4981A internal pull-up resistor

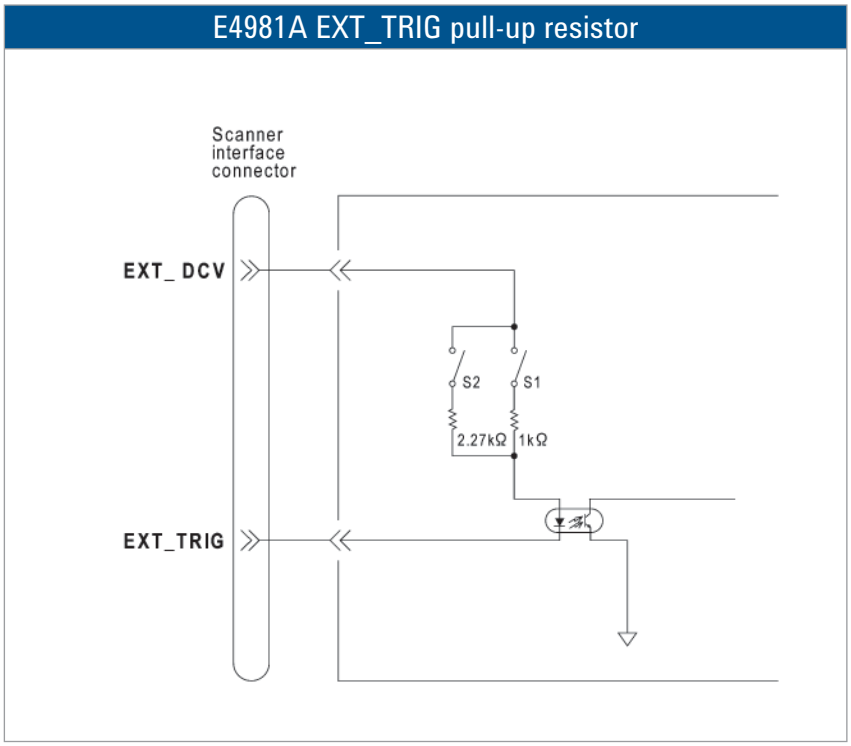

Figure 4. E4981A EXT_TRIG pull-up resistor

Table 19. Pin assignment comparison

Pin	E4981A	4268A	4288A
1	/CH0		
2	/CH2		
3	/CH4		
4	CH6	(reserved)	
5	/CH_VALID		
6	/INDEX		
7	EXT_DCV		
8	/CH1		
9	/CH3		
10	/CH5		
11	/CH7	(reserved)	
12	EXT_TRIG		
13	/EOM		
14	COM		

Remote Control Comparison

Table 20. Trigger system comparison

Items	E4981A	4268A/4288A
External trigger (Rear BNC, handler and scanner I/F)	The external trigger can be accepted when the trigger is set at EXT (:TRIGger[:SEQuence1]:SOURce is set at EXT)	The external trigger can be accepted when the trigger is set at EXT/BUS/MAN (:TRIGger[:SEQuence1]:SOURce is set at EXT/BUS/MAN)
*TRG, and :TRIG commands	The TRG can be accepted when the trigger is set at either MAN or BUS	The TRG can be accepted when the trigger is set at either MAN, BUS, or EXT.
BNC external trigger signal polarity	The polarity of BNC external trigger signal can be selected. (:TRIGger[:SEQ1]:SLOPe)	The polarity of BNC external trigger signal is fixed at positive edge.

Status register comparison

Status register is the same as the 4288A/4268A.

Other Functions Comparison

Frequency shift at 1 MHz

-2% is added.

Synchronous source/source delay

The function is the same as the 4268A.

Trigger delay

The function is the same as the 4268A/4288A.

Signal level compensation (SLC)

E4981A has the signal level compensation function instead of auto level control function of the 4268A. The signal level compensation avoids the signal level drop due to the cable resistance. SLC contributes faster signal level convergence than ALC of the 4268A. The SLC will have a level error when the dissipation factor is high.

E4981A SLC is available in the following measurement ranges

- 120 Hz: 220 µF, 470 µF, 1 mF range
- 1 kHz: 22 µF, 47 µF, 100 µF range

The following charts show the estimated level error at Signal Level Compensation (SLC) on and off.

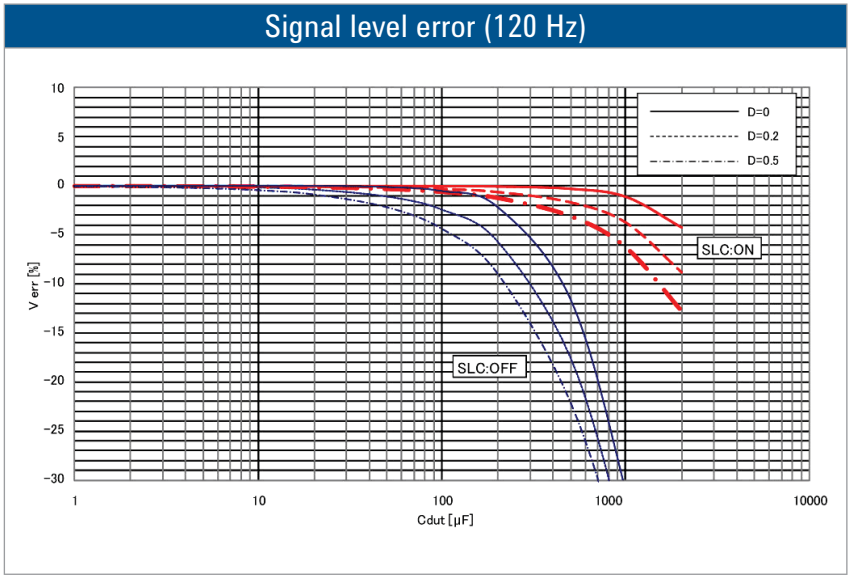

Figure 5. Signal level error (120 Hz)

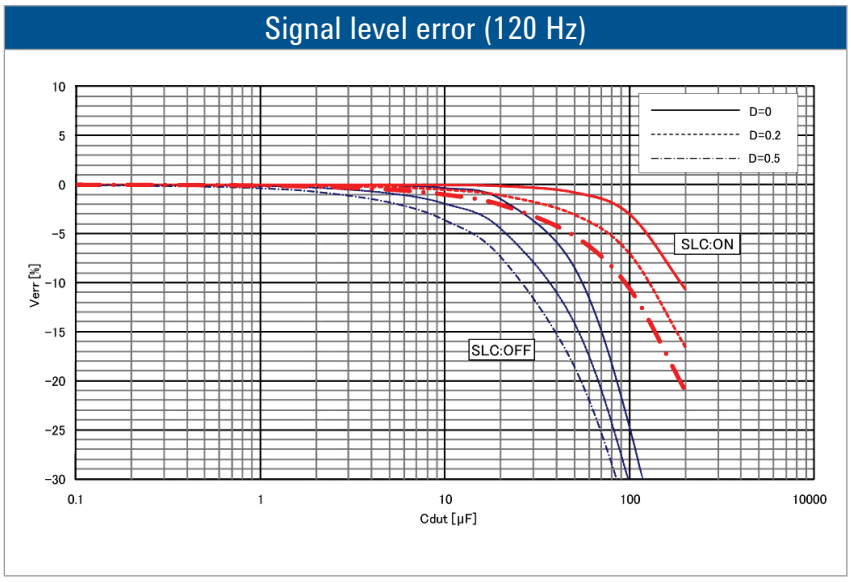

Figure 6. Signal level error (1 kHz)

4268A Auto Level Control

4268A auto level control is available in the following ranges

- 120 Hz: 100 μF, 1 mF range
- 1 kHz: 10 μF, 100 μF range

Table 21. 4268A ALC Operation Range

Measurement frequency	DUT		Measurement voltage	
	Dissipation factor D	Capacitance C	Minimum	Maximum
120 Hz	D ≤ 0.2	C ≤ 600 μF	0.1 V	1.0 V
		800 μF < C ≤ 1200 μF	0.1 V	(600 μF/C) V
		C > 1200 μF	Out of range	
	0.2 < D ≤ 0.5	C ≤ 600 μF	0.1 V	1.0 V
		C > 600 μF	Out of range	
	D > 0.5	All	Out of range	
1 kHz	D ≤ 0.2	C ≤ 70 μF	0.1 V	1.0 V
		70 μF < C ≤ 140 μF	0.1 V	(70 μF/C) V
	0.2 < D ≤ 0.5	C ≤ 70 μF	0.1 V	1.0 V
		C > 70 μF	Out of range	
	D > 0.5	All	Out of range	

Resume

The resume function is not available in the E4981A as some settings are lost after power-off. The auto recall function replaces the resume function. When you store the instrument setup into the No. 9 of internal memory, the setting is recalled automatically at power on.

Signal Source Output Impedance

Table 22. Measurement signal source output impedance

	E4981A	4268A	4288A
120 Hz	• Measurement range 10 nF to 1 μF: 20 Ω • Measurement range 2.2 μF to 100 μF: 0.3 Ω • Measurement range 220 μF to 1 mF ◦ SLC ON: 0.3 Ω ◦ SLC OFF: 1.5 Ω	• ALC: OFF: ≤ 1.5 Ω • ALC: ON ◦ Measurement range 10 nF to 10 μF: ≤ 1.5 Ω ◦ Measurement range 100 μF to 1 mF: ≤ 0.1 Ω	• NA
1 kHz	• Measurement range 100 pF to 100 nF: 20 Ω • Measurement range 220 nF to 10 μF: 0.3 Ω • Measurement range 22 μF to 100 μF ◦ SLC ON: 0.3 Ω ◦ SLC OFF: 1.5 Ω	• ALC: OFF: ≤ 1.5 Ω • ALC: ON ◦ Measurement range 1 nF to 1 μF: ≤ 1.5 Ω ◦ Measurement range 10 μF to 100 μF: ≤ 0.1 Ω	• Measurement range 100 pF to 100 nF: 20 Ω • Measurement range 220 nF to 10uF: 1 Ω
1 MHz	20 Ω	NA	20 Ω

1. Cable: 0m

PC interface

GPIB, USB, and LAN are included.
The USB port on the front panel is only for USB memory. The USB port on the rear panel is to control the E4981A from a PC.

SCPI Commands

The differences of SCPI command between E4981A and 4268A/4288A are shown in the programming manual.

Web Resources

Visit our Web site for additional product information and literature.

E4981A
www.agilent.com/find/e4981a

LCR Meters
www.agilent.com/find/lcrmeters

Impedance analyzers
www.agilent.com/find/impedance

www.agilent.com
www.agilent.com/find/e4981a

Agilent Email Updates

www.agilent.com/find/emailupdates
Get the latest information on the products and applications you select.

www.lxistandard.org
LXI is the LAN-based successor to GPIB, providing faster, more efficient connectivity. Agilent is a founding member of the LXI consortium.

Agilent Channel Partners

www.agilent.com/find/channelpartners
Get the best of both worlds: Agilent's measurement expertise and product breadth, combined with channel partner convenience.

Microsoft® is a U.S. registered trademark of Microsoft Corporation.

Agilent Advantage Services

Agilent Advantage Services is committed to your success throughout your equipment's lifetime. We share measurement and service expertise to help you create the products that change our world. To keep you competitive, we continually invest in tools and processes that speed up calibration and repair, reduce your cost of ownership, and move us ahead of your development curve.

www.agilent.com/find/advantageservices

Agilent Electronic Measurement Group
KEMA Certified
ISO 9001:2008
Quality Management System

www.agilent.com/quality

For more information on Agilent Technologies' products, applications or services, please contact your local Agilent office. The complete list is available at:

www.agilent.com/find/contactus

Americas

Canada	(877) 894 4414
Brazil	(11) 4197 3500
Latin America	305 269 7500
Mexico	01800 5064 800
United States	(800) 829 4444

Asia Pacific

Australia	1 800 629 485
China	800 810 0189
Hong Kong	800 938 693
India	1 800 112 929
Japan	0120 (421) 345
Korea	080 769 0800
Malaysia	1 800 888 848
Singapore	1 800 375 8100
Taiwan	0800 047 866
Thailand	1 800 226 008

Europe & Middle East

Austria	43 (0) 1 360 277 1571
Belgium	32 (0) 2 404 93 40
Denmark	45 70 13 15 15
Finland	358 (0) 10 855 2100
France	0825 010 700*
	*0.125 €/minute
Germany	49 (0) 7031 464 6333
Ireland	1890 924 204
Israel	972-3-9288-504/544
Italy	39 02 92 60 8484
Netherlands	31 (0) 20 547 2111
Spain	34 (91) 631 3300
Sweden	0200-88 22 55
Switzerland	0800 80 53 53
United Kingdom	44 (0) 118 9276201

Other European Countries:
www.agilent.com/find/contactus

Revised: July 8, 2010

Product specifications and descriptions in this document subject to change without notice.

© Agilent Technologies, Inc. 2010
Printed in USA, September 2, 2010
5989-9957EN

Agilent Technologies