Agilent Pulsed-IV Parametric Test Solution Selection Guide

Agilent Pulsed-IV solutions to meet your needs

Pulsed-IV parametric testing is becoming an increasingly common requirement for the development of semiconductor process and the evaluation of semiconductor devices. In recent years, the need for very accurate pulsed IV measurement has increased due to the development of more advanced processes utilizing exotic materials, the push for devices with lower power consumption, and many other factors.

To meet these needs Agilent offers a variety of pulsed-IV parametric test solutions that supply the widest range of pulse widths, voltage/current output, and performance available in the industry. Each solution is well-proven and has already been used by many researchers worldwide to meet various advanced measurement needs. These range from the process development of cutting-edge technologies utilizing high-k gate dielectrics and SOI transistors to the evaluation of more conventional semiconductor process such as GaAs and HEMT or new materials such as SiC, GaN or Organic devices which require both high voltage and high current measurement capabilities.

This selection guide provides an overview and side-by-side comparison of all of Agilent's pulsed-IV parametric test solutions to enable you to determine the best solution to meet your unique needs.

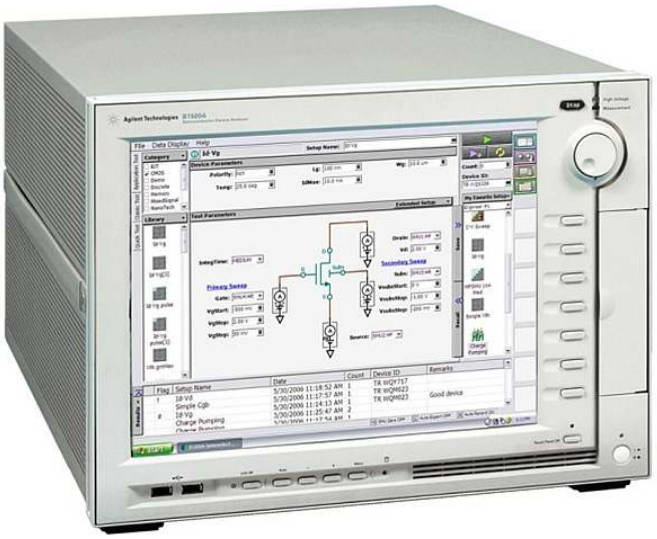

B1500A Semiconductor Device Analyzer

Table 1. Multiple options for advanced pulsed measurement needs

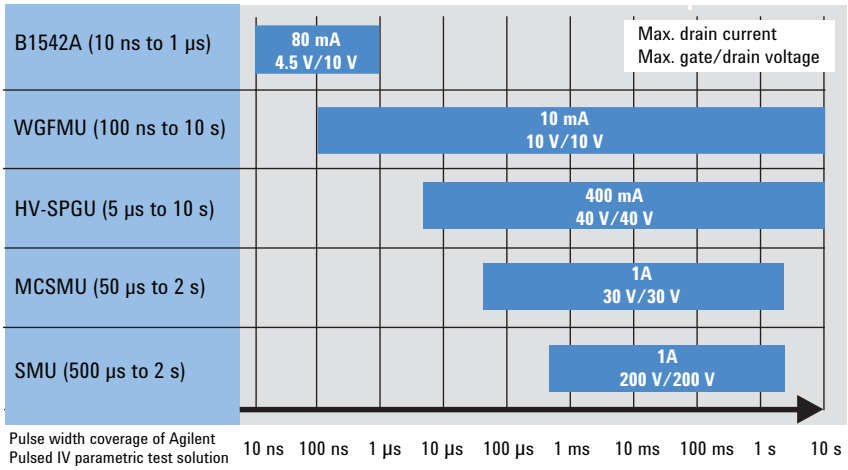

Anticipate ___Accelerate ___Achieve

Agilent Technologies

Selecting the Best Solution to Meet Your Measurement Needs

This selection guide is designed to assist you in comparing Agilent's pulsed-IV measurement solutions and selecting the best one for your measurement applications. By following the steps outlined below you should be able to determine the proper measurement solution to meet your needs.

1. For each of the pulsed-IV specifications listed below, determine your measurement requirements.

   Note: Make sure that you understand that some solutions only work for specific device types and configurations.

   - Range of pulse widths
   - Required current measurement resolution
   - Maximum voltage and current output capability
   - Dual pulsing capability

2. Determine which solution or solutions meet your pulse width requirements, taking into account your future needs as well.

3. If more than one solution meets your pulse width requirements, then choose among these solutions using the other measurement parameters (current measurement resolution, current/voltage output capability, etc.). Please keep in mind that there may be some trade-offs among these various parameters (such as accuracy versus voltage/current output capability).

4. Once you have decided upon a solution re-verify all of the specifications of that solution to make sure that it meets the measurement needs of your applications and devices.

5. Software is also key factor to control measurement equipment or to synchronize two or more equipment on the Pulsed IV measurement. In some cases, the calculation is required to evaluate current from voltage. Agilent supplies a library of application tests for performing pulsed IV measurement on the EasyEXPERT software.

6. To succeed in making high speed pulsed IV measurement you need more than just the correct measurement instrumentation; you also need to put sufficient forethought into the creation of the test structures that will be used to make the measurement. Attempts to make fast pulsed measurements with conventional DC test structures using DC positioners are in general unlikely to yield good measurement results. In general, fast pulsed measurements require test structures designed for a ground-signal (GS) or ground-signal-ground (GSG) measurement environment and RF positioners. The following figure illustrates this point.

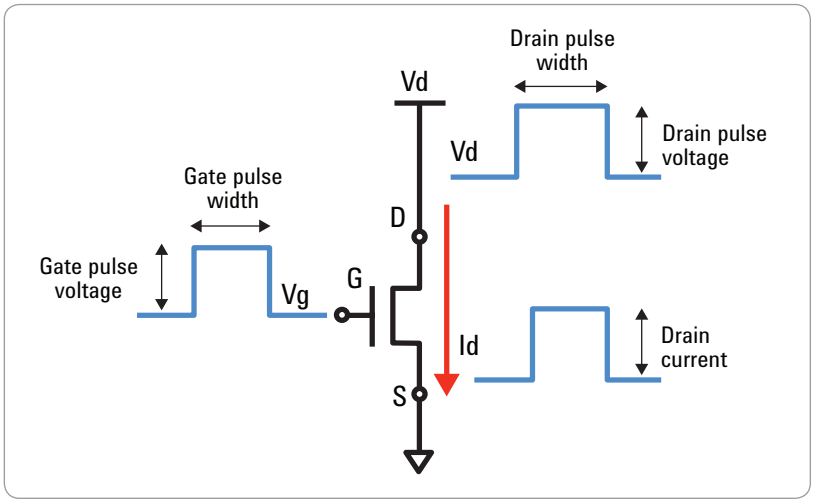

Figure 1. Example of pulsed IV

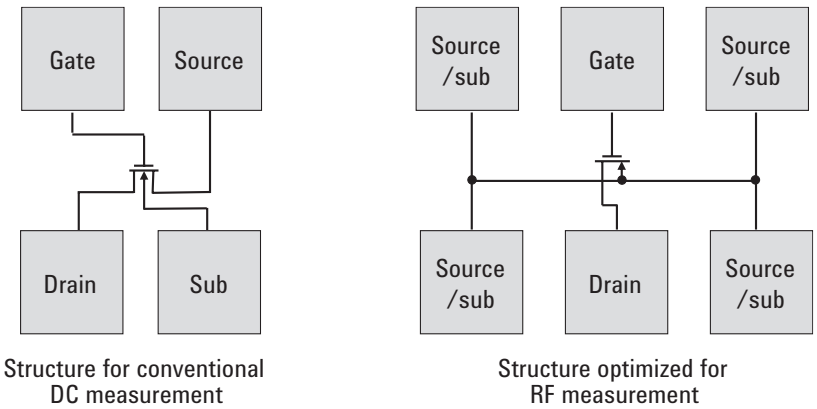

Figure 2. Test structure for DC measurement and RF measurement

Pulsed-IV Solution Overview—B1542A 10 ns Pulsed IV package (10 ns to 1 µs)

- Proven, accurate high-k/SOI transistor characterization with 10 nsec pulse width
- Ten nanosecond pulsed IV parametric test solution

The Agilent B1542A 10 nanosecond pulsed IV parametric test solution has a pulse width range from 10 nsec to 1 µsec. It is the best choice for characterizing MOSFETs utilizing high-k gate dielectrics and MOSFETs fabricated on SOI wafers.

This pulsed IV solution allows you to apply a 10 nsec pulse with 2 ns rise and fall times (the fastest in the industry) that also has minimal overshoot and undershoot. This feature is based on utilizing all of Agilent's accumulated technologies for RF, high speed signal generation and precise dc measurement for over twenty years.

If you already own one of the supported Agilent pulse generators or oscilloscopes, then you can use them to reduce the total cost of this solution.

Features

- 10 nanosecond gate pulse widths
- 1 µA current measurement resolution
- Accurate Id-Vd and Id-Vg measurement
- Easy switching between dc and pulsed measurements
- Supported analyzers: B1500A, 4155/56 (B, C series), E5270B and E526xA series
- Can use other existing supported instruments to reduce the total solution cost
- Easy setup using Agilent EasyEXPERT software

Target device:

- High-k gate dielectric MOSFETs
- SOI wafer MOSFETs

For more information:

- Technical overview *Agilent B1542A Pulsed IV Parametric Test Solution*, 5989-5262EN

Since the achievable pulse width strongly depends on the bandwidth of the oscilloscope and the minimum pulse width and minimum transition time of the pulse generator, only certain models of these instruments are supported. Please refer the guideline table for the complete list of supported instruments.

Note: Before placing an order please verify with an Agilent sales representative the latest information on supported pulse generators and oscilloscopes.

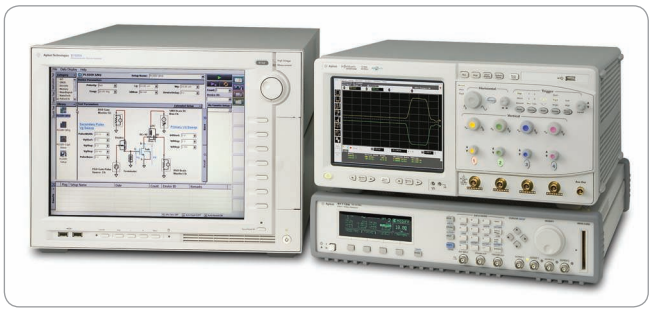

Figure 3. B1542A ten nanosecond pulsed IV parametric test solution

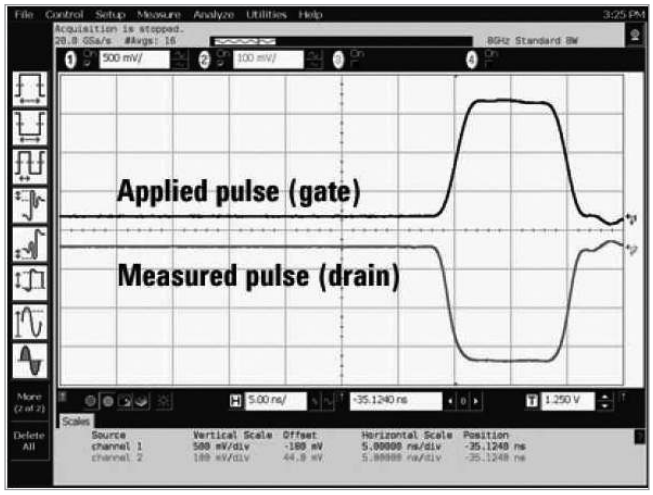

Figure 4. Example of output pulse shape

Table 2. Supported equipment on the B1542A

Guideline for oscilloscope and pulse generator selection and recommendation		
Range of pulse width	Oscilloscope (Required performance)	Pulse generator (Required performance)
Over 10 ns	Need over 2.5GHz band width: DSO/MSO 9000A series, DSO 90000A series, DSO 80000B series, 54850A series	Need 10 ns minimum pulse width and 2 ns minimum transition time: 81110A, 8110A
Over 50 ns	Need over 1GHz band width: DSO/MSO8104A, DSO/MSO9104A	Need 50 ns minimum pulse width and 7.5 ns minimum transition time: 81150A
Over 100 ns	Need over 600MHz band width: DSO/MSO8064A	Need 100 ns minimum pulse width and 5 ns minimum transition time: 81101A

Pulsed-IV Solution Overview—B1530A WGFMU (100 ns to 10 s)

- One hundred nanosecond pulsed IV parametric test solution
- Ultra accurate and fast characterization with 1 nA current measurement resolution
- Waveform generator/fast measurement unit (WGFMU)

The Agilent B1530A WGFMU is a plug-in module for the B1500A semiconductor device analyzer that provides a 100 nanosecond pulsed IV parametric test solution with 1 nA current measurement resolution. The module supports a pulse width range from 100 nsec to 10 sec, and it is the best choice for the precise evaluation of advanced MOSFETs and nano-scale devices such as carbon nanotube (CNT) transistors.

The WGFMU's powerful capabilities, such as a 5 ns sampling interval with 1 nA measurement resolution, cover applications that require both fast and precise measurements.

Each WGFMU module has two channels, so only one module is necessary for three-terminal device evaluation. This solution does not require any other external equipment, complex cabling or custom circuitry. The WGFMU provides a true one-box pulsed IV measurement solution.

Features

- 1 nA current measurement resolution
- 100 nanosecond gate pulse widths
- Dual pulse capability to apply to both gate and drain
- One-box solution that does not require any other external equipment or complicated cable connections.

Target device:

- Advanced semiconductor device, such as those fabricated in sub-45 nm processes
- Advanced nanotechnology device, such as CNT FETs, and carbon nanowire devices
- Organic based electronic devices
- Single electron transistor (SET) devices

For more information:

- Technical overview *Agilent B1530A Waveform Generator/Fast Measurement Unit*, 5989-8378EN

Figure 5. B1530A waveform generator/fast measurement unit on B1500A

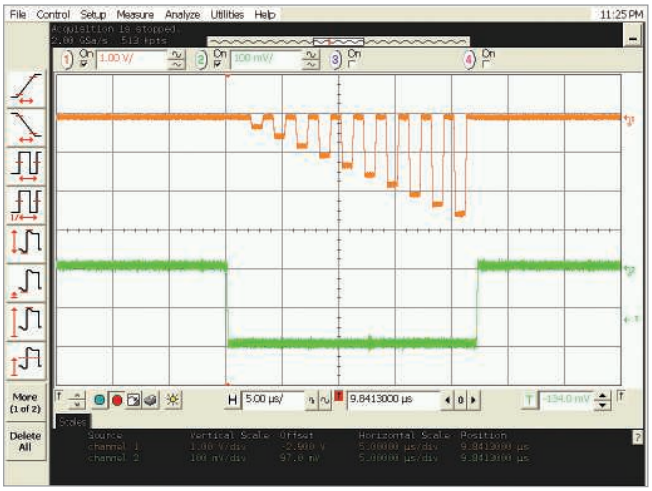

Figure 6. Example of output waveform for Pulsed IV

Pulsed-IV Solution Overview—B1525A HV-SPGU (5 µs to 10 s)

- Medium power pulsed IV parametric test solution
- Fast characterization with 40 V voltage and 400 mA current applying capability
- High-voltage semiconductor pulse generator unit (HV-SPGU)

The Agilent B1525A HV-SPGU is a plug-in module for the B1500A semiconductor device analyzer that provides a 5 microsecond pulsed IV parametric test solution with up to 40 V and 400 mA output capability. It is the best choice for pulsed IV parametric measurement for middle range power devices, such as GaAs and HEMT devices for RF applications.

The HV-SPGU module has an output-voltage monitor capability that supports a 5 µs sampling interval, providing superb accuracy. As shown in the block diagram this feature enables the calculation of the output current using the known output impedance of the HV-SPGU module.

The features in HV-SPGU module, the highest accurate voltage forcing among the pulse generators for semiconductor test, arbitrary waveform generation with 10 ns setting resolution, offer best-in-class pulse generation to meet wider application coverage.

Each HV-SPGU module has two channels, so only one module is necessary for three-terminal device evaluation. This solution does not require any other external equipment or complex cabling.

EasyEXPERT supplies a library of application tests for performing pulsed IV measurement using HV-SPGU. The most basic of these application tests permits you to specify single (spot) pulsed measurement on two HV-SPGU channels. The setup screen for this application test is shown in Figure 8.

(Note: Although the B1525A HV-SPGU module's specified minimum pulse width is 50 nsec, the minimum pulse width of this solution is limited by the minimum current measurement interval of B1525A, 5 µs.)

Features

- Up to 40 V and 400 mA output capability
- Pulse width range of 5 µs to 10 s
- Dual pulse capability to apply to both Gate and Drain
- One-box solution that does not require any other external equipment or complicated cable connections.
- Easy setup using Agilent EasyEXPERT software
- 40 µA current measurement resolution

Target device:

- Small RF signal MOSFET devices
- GaAs and HEMT devices

For more information:

- Technical overview *High Power Pulsed IV Solution Utilizing the B1525A HV-SPGU*, 5990-3786EN

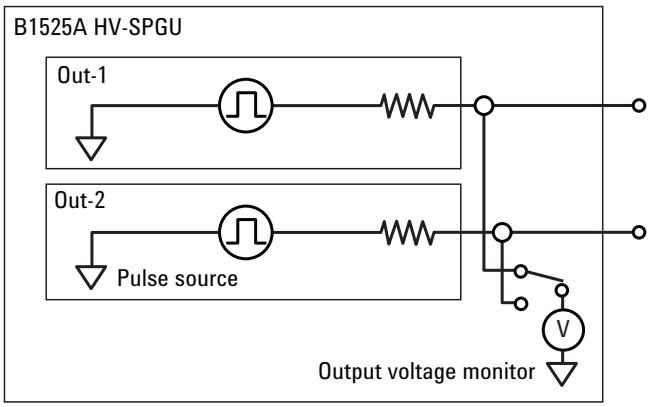

Figure 7. Block diagram of B1525A HV-SPGU

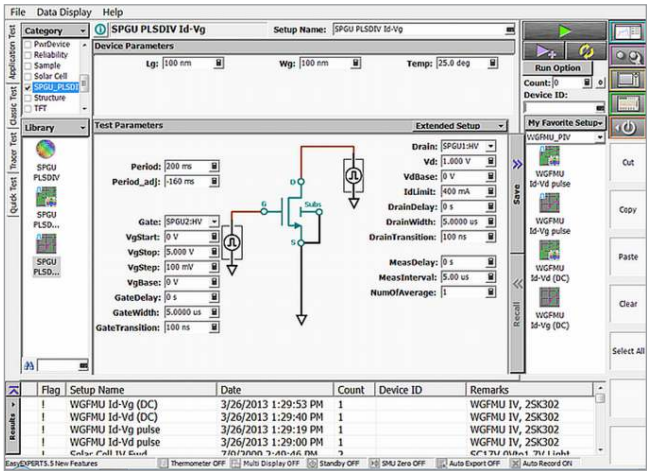

Figure 8. Sample application test for pulsed IV solution using B1525A HV-SPGU

Pulsed-IV Solution Overview—B1514A MCSMU (50 µs to 2 s)

- High power 50 µs pulsed IV parametric test solution
- Fast characterization with up to 30 V and 1 A source output
- Medium Current Source/ Monitor Unit (MCSMU)

The Agilent B1514A MCSMU is a plug-in module for the B1500A Semiconductor Device Analyzer that provides a 50 µs pulsed IV parametric test solution with up to 30 V and 1 A source output. This allows you to avoid self-heating on the IV characteristics measurement for the medium power and high power devices.

The MCSMU is a floating SMU with a short pulse output capability based on the SMU technology which is well known and has been used for a long time by many researchers and engineers both semiconductor and non-semiconductor industries. The N1255A 2 channel connection adapter shown in figure 10 is used to convert the MCSMU dedicated output terminals to traditional SMU output terminals.

The output IV waveforms can be monitored in the Tracer Test mode as shown in figure 11. You can monitor both current and voltage waveforms with 2 µs sampling interval. You can set the narrow pulses accurately and easily by optimizing the pulse timing parameters, and obtain accurate result easily.

It is the best choice for the pulsed IV parametric measurement of the medium power and high power devices such as SiC devices, GaN devices, and organic devices.

Features

- Up to 30 V and 1 A pulse output
- 50 µs to 2 s pulse width with minimum 10 µs setting resolution
- 4-channel IV waveform monitor with 2 µs sampling interval
- Dual synchronous pulsed measurement with source output to gate and drain, with minimum 2 µs pulse delay setting
- Proven accurate and conventional pulsed IV measurement
- Easy setup using Agilent EasyEXPERT software

Target device:

- SiC devices
- GaN devices
- Organic devices

For more information:

- Technical overview *30 V — 1 A Pulsed IV Measurement Using the Agilent B1500A's 50 µs pulsed MCSMU*, 5991-2502EN

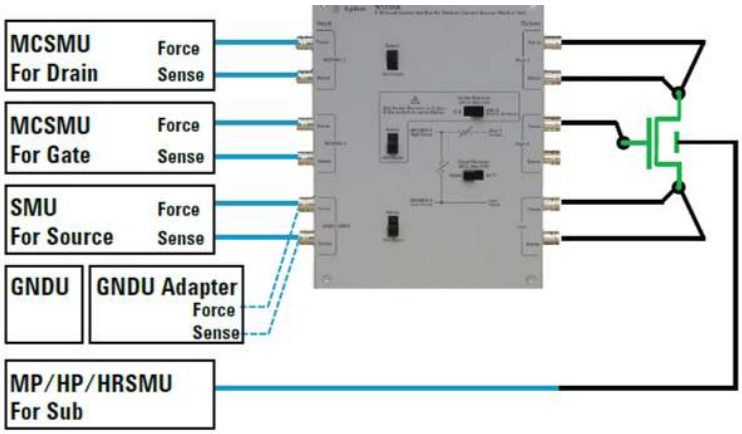

Figure 9. N1255A 2-channel connection adapter for B1514A Medium Current Source/ Monitor Unit

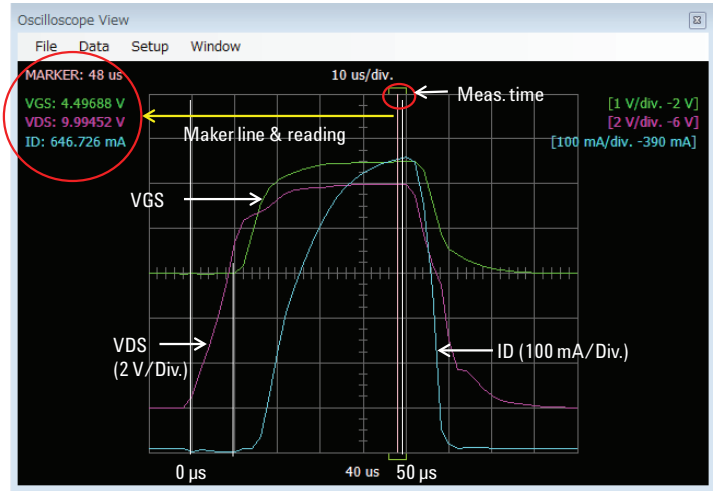

Figure 10. Oscilloscope View Measurement Example, 10 V and 50 µs Pulse Output to Gate and Drain.

Pulsed-IV Solution Overview—SMU (500 µs to 2 s)

- High power pulsed IV parametric test solution
- High voltage/current characterization with 200 V voltage and 1 A current sourcing capability
- Source and measurement unit
- B1510A, B1511A, B1511B, B1517A for B1500A

The Agilent source measurement units (SMUs) for parametric/device analyzers provide wide coverage for pulsed IV parametric test, with up to 200 V and 1 A when using the high power SMU (HPSMU). This allows you to measure the IV characteristics of high power devices (such as those used in RF applications) and avoid self-heating effects. Agilent SMUs have a pulse width range of 500 µs to 2 s.

This method is well-proven and has been used for a long time by many researchers and engineers both in and out of the semiconductor industry.

Features

- Wide coverage: Up to 200 V and 1 A (High power SMU)
- Pulse width range of 500 µs to 2 s
- Synchronized pulse measurement capability
- One-box solution that does not require any other external equipment or complicated cable connections.
- Proven accurate and conventional pulsed IV measurement
- Easy setup using Agilent EasyEXPERT software

Target device:

- RF signal FET devices
- High power semiconductor devices

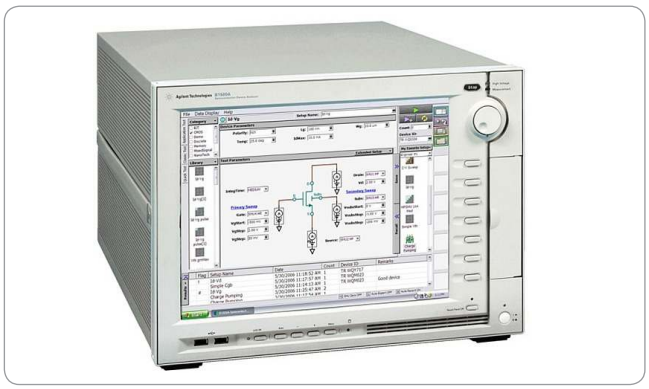

Figure 11. Agilent B1500A Semiconductor Device Analyzer

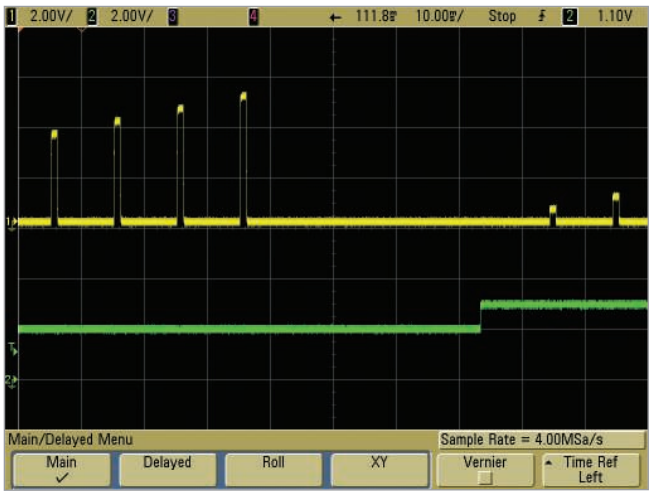

Figure 12. Example of SMU output in pulse measurement

Table 3. Key specifications of SMUs

Key specifications of Agilent SMUs for pulsed-IV measurement				
SMU	Max. voltage	Max. current	Min. current resolution	Max. pulse width
B1500A				
B1510A HPSMU	200 V	1 A	10 fA	2 s
B1511A/ B1511B MPSMU	100 V	100 mA	10 fA	2 s
B1517A HRSMU	100 V	100 mA	1 fA	2 s
E5270B				
E5280B HPSMU	200 V	1 A	10 fA	2 s
E5281B MPSMU	100 V	100 mA	10 fA	2 s
E5287A HRSMU	100 V	100 mA	1 fA	2 s

Tips for Accurate Pulsed-IV Parametric Test Measurement

The tips listed below are based on years of Agilent's experience making high-frequency and pulsed measurement. For additional help and information please refer to the referenced application notes or contact your local Agilent instrument support.

Take into account the frequency characteristics of the entire measurement system

A narrow pulse, especially one under 100 ns, includes high-frequency harmonics over 1 GHz. If the frequency response of the cables and probes cannot support this bandwidth then the shape and integrity of the pulses will be compromised and the measurement data will not be accurate. For this reason it is necessary to consider the measurement setup as a whole, including the signal return path and the positioning of the DUT and probe pads.

We highly recommend using RF probes with a Ground-Signal (GS) or Ground-Signal-Ground (GSG) RF layout design in the TEG.*

For more information, please refer the B1542A Pulsed IV package User's Guide (Agilent part number: B1542-90000).

** TEG: Test Element Group*

Preventing DUT oscillation

In general, devices with high gain factors (Gm or Hfe) such as HEMTs are very susceptible to oscillations when making parametric measurements. Of course, if any oscillation occurs then the measurement data is not accurate.

Inserting ferrite beads around the probes can be effective in preventing DUT oscillation. In addition, the ferrite beads also reduce parasitic capacitive feedback which improves the high frequency characteristics of the overall system.

For more information, please refer the application note, *Techniques & Applications for High Throughput & Stable Characterization* (Literature number: 5950-2954), or the B1500A User's Guide (Agilent part number: B1500-90000).

Specifications and feature comparison

Pulsed IV parametric test

Table 4. Specifications and feature comparison — Pulsed IV parametric test

Comparison table of key specifications and features					
Solution	B1542A pulsed IV parametric test solution	B1530A WGFMU	B1525A HV-SPGU	B1514A MCSMU	SMU (MP/HP/HR)
Analyzer support	B1500A, E5270B, E526xA	B1500A	B1500A	B1500A	B1500A, 4155C, 4156C
Maximum gate/ drain voltage	4.5 V/10 V	10 V/10 V	40 V/40 V	30V / 30 V	100 V (MPSMU/HRSMU) 200 V (HPSMU) [2]
Maximum drain current	80 mA	10 mA	400 mA	1 A	100 mA (MPSMU/ HRSMU) 1 A (HPSMU) [2]
Minimum drain current res.	1 µA	2 nA (effective)	40 µA	10 pA	1 fA (HRSMU)
Pulse width range	10 ns – 1 µs	100 ns – 10 s	5 µs – 10 s	50 µs – 2 s	500 µs – 2 s
DC (SMU) measurement	Yes	Yes	Yes [2]	Yes [3]	Yes
Waveform monitor function	Yes	Yes	No	Yes	No
Drain pulse	No	Yes	Yes	Yes	Yes
Software	EasyEXPERT	EasyEXPERT/ Instrument library	EasyEXPERT/ Flex	EasyEXPERT/ Flex	EasyEXPERT/ Flex
External equipment	Oscilloscope, PG [1]	None	None	None	None
Connection	Bias-T/Splitter	Connect WGFMU directly	Connect SPGU directly	N1255A Connection box	Connect SMU directly

1. *Support pulse generator: 8110A, 81101A, 81110A, 81150A, Support oscilloscope: DSO90000A series, DSO80000B series, DSO9000A series, MSO9000A series, DSO8000A series, MSO8000A series and 54850 series. Please ask Agilent sales representative to confirm to confi rm the latest information on support pulse generator and oscilloscope.*
2. *Sample program doesn't support DC measurement function.*
3. *Maximum current of DC mode on MCSMU module is 100 mA.*

Information resource

Table 5. Reference and resource

Literature	Pub type	Pub number
Agilent B1500A Semiconductor device analyzer	Brochure	5991-2443EN
Agilent B1500A Semiconductor Device Analyzer	Technical data sheet	5989-2785EN
Agilent B1542A Pulsed IV Parametric Test Solution	Technical overview	5989-5262EN
Agilent B1530A Waveform Generator/Fast Measurement Unit (WGFMU)	Product note	5990-4567EN
High Power Pulsed IV Solution Utilizing the B1525A HV-SPGU	Technical overview	5990-3786EN
Techniques & Applications for High Throughput & Stable Characterization	Application note	5950-2954
Web resource	**Website**	
Visit our Web sites for additional product information and literature.		
B1500A semiconductor device analyzer	www.agilent.com/find/b1500a	
B1530A Waveform Generator/Fast Measurement Unit	www.agilent.com/find/wgfmu	
EasyEXPERT/Desktop EasyEXPERT	www.agilent.com/find/easyexpert	
E5270B 8-slot Precision Measurement Mainframe	www.agilent.com/find/e5270b	

Agilent B2900A Series Precision Source/Measure Unit
www.agilent.com/find/B2900A

Agilent B1500A Semiconductor Device Analyzer
www.agilent.com/find/B1500A

Agilent B1505A Power Device Analyzer/Curve Tracer
www.agilent.com/find/B1505A

myAgilent

www.agilent.com/find/myagilent
A personalized view into the information most relevant to you.

Three-Year Warranty

www.agilent.com/find/ThreeYearWarranty
Beyond product specification, changing the ownership experience. Agilent is the only test and measurement company that offers three-year warranty on all instruments, worldwide.

Agilent Assurance Plans

www.agilent.com/find/AssurancePlans
Five years of protection and no budgetary surprises to ensure your instruments are operating to specifications and you can continually rely on accurate measurements.

www.agilent.com/quality

Agilent Electronic Measurement Group
DEKRA Certified ISO 9001:2008
Quality Management System

Agilent Channel Partners

www.agilent.com/find/channelpartners
Get the best of both worlds: Agilent's measurement expertise and product breadth, combined with channel partner convenience.

www.agilent.com
www.agilent.com/find/b1500A

For more information on Agilent Technologies' products, applications or services, please contact your local Agilent office. The complete list is available at:
www.agilent.com/find/contactus

Americas

Canada	(877) 894 4414
Brazil	(11) 4197 3600
Mexico	01800 5064 800
United States	(800) 829 4444

Asia Pacific

Australia	1 800 629 485
China	800 810 0189
Hong Kong	800 938 693
India	1 800 112 929
Japan	0120 (421) 345
Korea	080 769 0800
Malaysia	1 800 888 848
Singapore	1 800 375 8100
Taiwan	0800 047 866
Other AP Countries	(65) 375 8100

Europe & Middle East

Belgium	32 (0) 2 404 93 40
Denmark	45 45 80 12 15
Finland	358 (0) 10 855 2100
France	0825 010 700*
	*0.125 €/minute
Germany	49 (0) 7031 464 6333
Ireland	1890 924 204
Israel	972-3-9288-504/544
Italy	39 02 92 60 8484
Netherlands	31 (0) 20 547 2111
Spain	34 (91) 631 3300
Sweden	0200-88 22 55
United Kingdom	44 (0) 118 927 6201

For other unlisted countries:
www.agilent.com/find/contactus
(BP-09-27-13)

Product specifications and descriptions in this document subject to change without notice.

© Agilent Technologies, Inc. 2009-2013
Published in USA, December 4, 2013
5990-3672EN

Agilent Technologies