CXA X-Series Signal Analyzer N9000A

- 9 kHz up to 26.5 GHz frequency range
- Up to +17 dBm TOI, –163 dBm DANL
- ± 0.50 dB absolute amplitude accuracy
- Up to 25 MHz analysis bandwidth
- 9 kHz up to 6 GHz tracking generator

Anticipate ___Accelerate ___Achieve

Agilent Technologies

What is X-Series Signal Analysis?

Future-ready
Optimize your investment and extend instrument longevity with upgradeable processor, memory, connectivity, and more to keep your test assets current today and tomorrow.

Consistent measurement framework
Achieve measurement integrity across your organization and drive more productivity in less time by leveraging a proven foundation for signal analysis and identical operation across the X-Series instruments.

Broadest set of applications
Address the changing demands of technology with more than 25 measurement applications, the ability to run software inside the open Windows® operating system, and a first-to-market track record in emerging standards.

Stay ready, stay in sync, and **arrive ahead**—with the Agilent X-Series.

www.agilent.com/find/X-Series

Summary of Key Specifications

	RF	Microwave
Frequency ranges	Minimum: 9 kHz	Minimum: 9 kHz
	Maximum: 3.0, 7.5 GHz	Maximum: 13.6, 26.5 GHz
Analysis bandwidth	10 MHz (standard)	10 MHz (standard)
	25 MHz (optional)	25 MHz (optional)
Displayed average noise level (DANL)	–163 dBm at 1 GHz, preamplifier on	–163 dBm at 1 GHz, –147 dBm at 26.5 GHz, preamplifier on
Third-order intermodulation (TOI) distortion	+17 dBm at 1 GHz	+15 dBm at 1 GHz, +14 dBm at 26.5 GHz
W-CDMA ACLR dynamic range	63 dBc (66 dBc with noise correction on)	66 dBc (73 dBc with noise correction on)
Phase noise	–102 dBc/Hz (10 kHz offset, 1 GHz carrier)	–102 dBc/Hz (10 kHz offset, 1 GHz carrier)
Amplitude accuracy	± 0.50 dB	± 0.50 dB

Master the Essentials

A great low-cost signal analyzer surpasses the basics and delivers crucial functionality. That's the strength of the CXA signal analyzer, the leading low-cost tool for essential signal characterization. Its capabilities provide a foundation for cost-effective testing and seamless integration with the other X-Series models. The CXA is also an excellent teaching tool for RF and microwave technologies and signal analysis. Get must-have capability with X-Series expandability in the CXA—and master the essentials.

Master the essentials in manufacturing test

With general-purpose signal analysis and a variety of license key upgradable measurement applications, you can quickly and easily reconfigure the CXA to fit changing requirements in manual or automated testing. You can also improve system uptime with the proven reliability of the X-Series technology platform.

Master the essentials in product development

The CXA helps you accelerate product development and design, while staying within your equipment budget. The ability to add measurement applications and 89600 VSA software allows you to work in more than 75 different modulation formats.

Master the essentials in RF and microwave education

The CXA is also an excellent tool for the teaching of RF and microwave signal analysis, from basic circuit characterization to advanced signal analysis. Beyond its versatile range of built-in capabilities, you can add 89600 VSA software as well as easily integrate the CXA into analysis environments such as MATLAB.

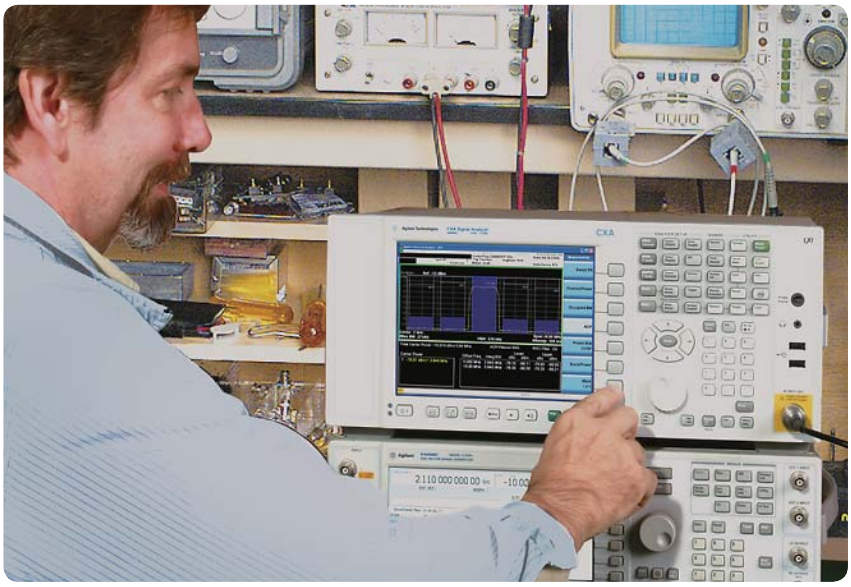

Add Dependable Signal Analysis to Manufacturing Test

The CXA is ideal for manual or automated testing of RF and microwave components such as amplifiers and filters, as well as electronic products such as cordless phones, wireless LAN routers, and wireless paging systems. Whether you are pursuing cost-reduction initiatives or greater throughput, the flexible, dependable CXA can enhance your manufacturing process.

Measurement capabilities include general-purpose spectrum analysis and one-button PowerSuite measurements. The optional built-in tracking generator[1] provides a fast and cost-effective solution for scalar network analysis. The additional 75 Ω input connector[1] helps make an easy cable TV signal measurement. For greater flexibility, you can quickly configure—and reconfigure—the CXA with more than 25 of software applications for specific measurements including analog demodulation, digital video, and wireless connectivity. Licensing upgrades make transitions fast and easy.

For automated test systems, the CXA provides GPIB, USB 2.0, and LAN (1000Base-T) connections, and is LXI class C compliant. In addition to SCPI programmability, the CXA is code-compatible with Agilent ESA spectrum analyzers, making it easy to move up to the CXA. The CXA is also remote-language compatible with all other Agilent X-Series signal analyzers.

In manual testing applications, learning is fast with the Windows®-based user interface. In addition, operators who are familiar with the Agilent ESA Series will appreciate the similarity of the CXA. Whenever questions do arise, the CXA's built-in help function provides fast access to the information you need to move forward.

Whether on the bench or integrated in a system, the CXA is designed to promote uptime with the proven reliability of the X-Series hardware and software platform—also used in the Agilent EXA, MXA, and PXA signal analyzers.

Express CXA

If you do not require specialized functionality, such as measurement applications or wider bandwidth, then a preconfigured CXA signal analyzer may be appropriate for you. Available through Agilent's distribution partners, these express configurations offer excellent value and the fastest delivery. For more information on the N9000AEP, see the CXA signal analyzer configuration guide (5990-4341EN).

www.agilent.com/find/express_CXA

1. *Supported on models up to 7.5 GHz frequency range.*

You can upgrade!

Options can be added after your initial purchase.

Most X-Series options are license-key upgradeable.

Control Costs with Essential R&D Measurements

Whether you're rapidly updating a next-generation product or revising an existing design, the CXA can help you perform signal characterization for testing, verification, and troubleshooting. The CXA's built-in capabilities allow you to obtain essential measurements of frequency, level, spurious, and distortion without overspending your budget.

For example, you can quickly measure spurs and harmonics by leveraging the speed and solid DANL performance of the CXA. In addition, you can make one-button measurements such as channel power, adjacent channel power (ACP), and occupied bandwidth (OBW) with PowerSuite. The CXA's built-in tracking generator provides a cost-effective solution for RF scalar network analysis allowing you to characterize the behavior of components or subsystems such as frequency response and insertion loss or gain.

Perform flexible digital modulation analysis with the W9064A VXA vector signal analysis measurement application, a general-purpose FFT-based spectrum analysis application with a wide selection of demodulation types and filters. Add the W9069A noise figure measurement application for one-button noise figure and gain measurements to help you design and evaluate your devices or receiving systems. Transform the CXA into a cost-effective EMI pre-compliance solution with the W6141A EMI measurement application to identify EMI problems earlier in the development process. These applications are tightly integrated with the CXA signal analyzer and SCPI programmable for easier operation.

On its own, the CXA supports low-cost research and design projects. As part of the Agilent X-Series, the CXA lets you leverage your expertise—and test procedures—across the EXA, MXA, and PXA, and across the life cycle of your product.

Enhance Theory with Practical Skills in Your Educational Lab

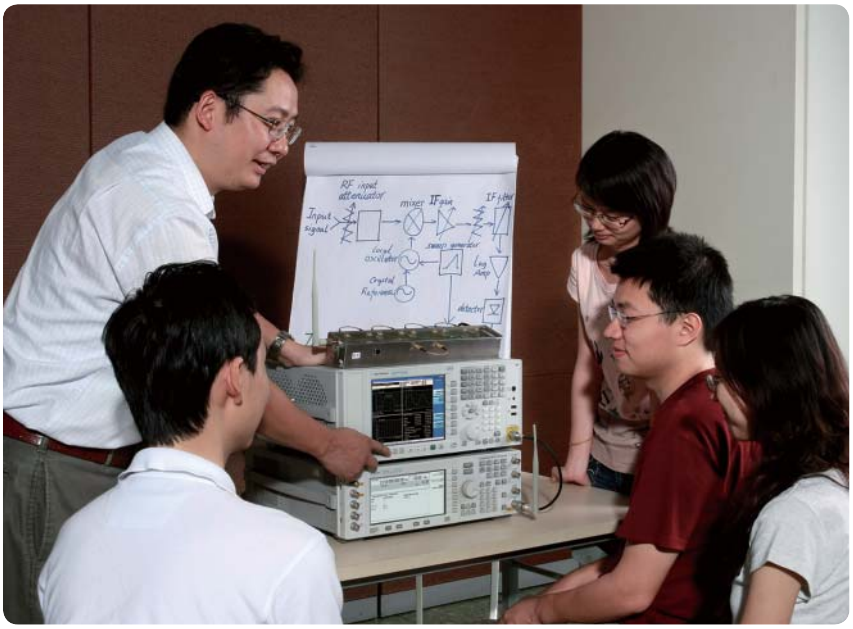

Whether their goal is to perform research or work in industry, the next generation of RF and microwave engineers can learn a lot with the CXA and its easy-to-use measurement capabilities. In your educational lab, students can develop practical skills and deeper insights into RF and microwave technologies through the fundamentals of signal analysis. You can also address future measurement needs with the flexibility of X-Series measurement applications and the 89600 VSA software.

The familiar and intuitive Windows-based X-Series interface lets your students focus on learning measurement techniques rather than instrument operation—skills that are applicable to across the Agilent X-Series product line.

Easily integrate the CXA into popular analysis environments such as MATLAB for data analysis, visualization, and publication using the instrument's open Windows platform. You can also utilize visual programming environments such as Agilent VEE Education for computation, simulation, and instrument control.

Help students explore RF concepts

The Agilent N9320BK-TR1 RF training kit can help students explore concepts in RF basics, circuit design, and communication systems. The kit includes RF transceiver training boards, lab sheets, lecture materials, and a measurement automation program (in Agilent VEE Pro format). When performing the exercises, the N9310A signal generator is a useful companion to the CXA signal analyzer.

For deeper insight into RF technology, the Agilent 89600 VSA software allows students to view what's happening inside complex wireless devices.

www.agilent.com/find/89600
www.agilent.com/find/RFtrainer

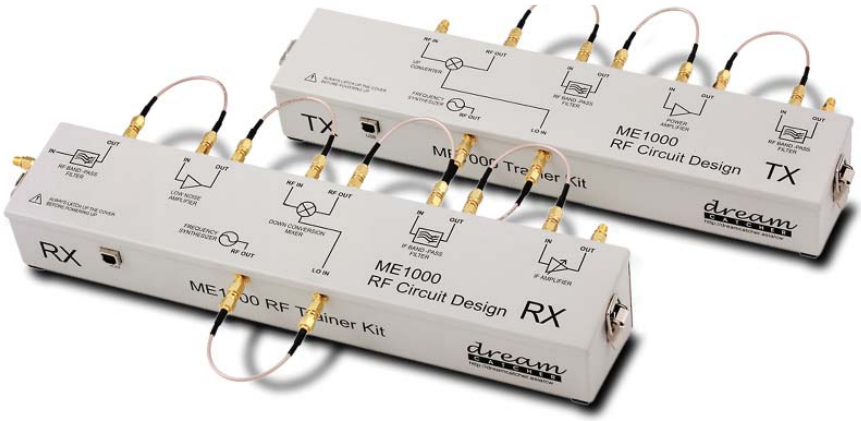

CXA Front and Rear Panels

View traces, results, and status easily on the 21.4 cm, high resolution XGA display.

Built-in PowerSuite for easy one-button power measurements.

Use up to six traces and three different detectors simultaneously.

Comprehensive marker functions for measuring a specific point/segment of data.

Control instrument configuration, I/O setup files, printers, and instrument presets.

Built-in tracking generator for low-cost scalar network analysis or additional 75 Ω input for cable TV analysis (on models up to 7.5 GHz frequency range)

Increase, decrease, or mute the speaker volume.

Get answers quickly from the comprehensive, context-sensitive help system.

Select a mode or measurement for your specific application.

Connect USB devices through the convenient front-panel ports.

Send and receive SCPI commands over the GPIB interface.

Control the CXA remotely with an external PC through the type-B USB 2.0 interface.

Connect peripherals and transfer data via the USB 2.0 (type-A port) interface.

Control the CXA remotely through 1000Base-T LAN port and LXI compatibility.

Wideband IF output

Evaluate noise figure using SNS or 346 Series noise sources and the W9069A measurement application.

Start measurements based on specific conditions by connecting external trigger signals.

View the display on an external VGA monitor.

Removable solid-state drive for instrument security

Use the CXA in an aerospace and defense environment with 50/60/400 Hz power input.

www.agilent.com
www.agilent.com/find/cxa

Related Literature

Agilent CXA Signal Analyzers

Data Sheet 5990-4327EN

Configuration Guide 5990-4341EN

X-Series Measurement Applications Brochure 5989-8019EN

X-Series Signal Analysis Brochure 5990-7998EN

Agilent Advantage Services

Agilent Advantage Services is committed to your success throughout your equipment's lifetime. To keep you competitive, we continually invest in tools and processes that speed up calibration and repair and reduce your cost of ownership. You can also use Infoline Web Services to manage equipment and services more effectively. By sharing our measurement and service expertise, we help you create the products that change our world.

www.agilent.com/find/advantageservices

myAgilent

www.agilent.com/find/myagilent

A personalized view into the information most relevant to you.

www.lxistandard.org

LAN eXtensions for Instruments puts the power of Ethernet and the Web inside your test systems. Agilent is a founding member of the LXI consortium.

Agilent Channel Partners

www.agilent.com/find/channelpartners

Get the best of both worlds: Agilent's measurement expertise and product breadth, combined with channel partner convenience.

Windows and MS Windows are U.S. registered trademarks of Microsoft Corporation.

Agilent Electronic Measurement Group
DEKRA Certified
ISO 9001:2008
Quality Management System

www.agilent.com/quality

For more information on Agilent Technologies' products, applications or services, please contact your local Agilent office. The complete list is available at:

www.agilent.com/find/contactus

Americas

Canada	(877) 894 4414
Brazil	(11) 4197 3600
Mexico	01800 5064 800
United States	(800) 829 4444

Asia Pacific

Australia	1 800 629 485
China	800 810 0189
Hong Kong	800 938 693
India	1 800 112 929
Japan	0120 (421) 345
Korea	080 769 0800
Malaysia	1 800 888 848
Singapore	1 800 375 8100
Taiwan	0800 047 866
Other AP Countries	(65) 375 8100

Europe & Middle East

Belgium	32 (0) 2 404 93 40
Denmark	45 45 80 12 15
Finland	358 (0) 10 855 2100
France	0825 010 700*
	*0.125 €/minute
Germany	49 (0) 7031 464 6333
Ireland	1890 924 204
Israel	972-3-9288-504/544
Italy	39 02 92 60 8484
Netherlands	31 (0) 20 547 2111
Spain	34 (91) 631 3300
Sweden	0200-88 22 55
United Kingdom	44 (0) 118 972 6201

For other unlisted countries:
www.agilent.com/find/contactus

Revised: January 6, 2012

Product specifications and descriptions in this document subject to change without notice.

Published in USA, October 15, 2012
5990-3927EN

Agilent Technologies