Agilent 81150A
With Arbitrary Bit Shaped Pattern

Application overview for 81150A with arbitrary bit shaped pattern and FlexRay™

For engineers working with serial buses up to 120 Mbit/s

- Any ideal and real-world signals from pulses, sine waves, Gaussian noise, arbitrary waveforms to any modulated signal
- Arbitrary bit-shaped pattern to emulate overshoot, asymmetric delay and duty cycle distortion up to 120 Mbit/s
- Pass through pattern for combined physical layer and protocol test up to 10 Mbit/s

Stress your analog, digital, and mixed signal devices to their limits

- **Pulse generator**
- **Pattern generator**
- **Function arbitrary generator**
- **Noise generator**

NEW!

Agilent Technologies

Introduction

FlexRay™ is a communication system supporting the needs of future in-car control applications, including higher data rates, deterministic behavior and the support of fault tolerance. The introduction of advanced systems combining multiple sensors, actuators and electronic control units requires interoperability with minimum signal quality as defined in the FlexRay standard.

Physical layer testing is the foundation of high quality devices and systems. Many factors such as interference issues of poor transmission channels, environment variations like temperature or altitude cause signal integrity issues and create failures.

A measurement set up with a mixed signal oscilloscope and a pulse pattern generator combined with a function arbitrary generator is a natural fit for these types of measurements. Designers can easily test analog sensor inputs, differential serial signals such as FlexRay and their digital control and I/O signal.

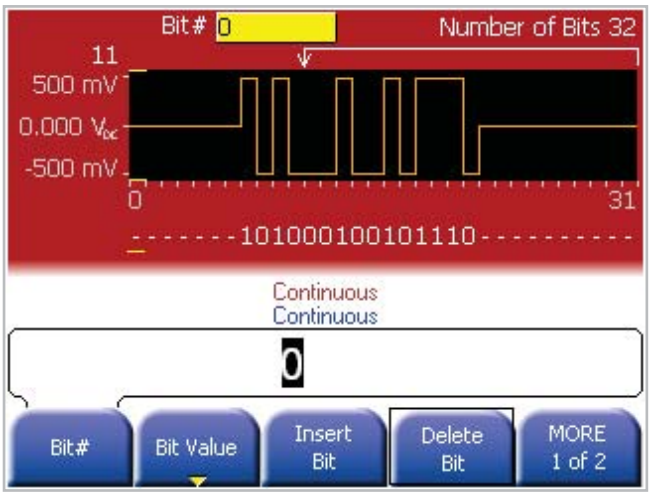

Figure 1. Ideal pattern without any distortion on 81150A

Reliable and Repeatable Physical Layer Tests with the 81150A

Ideal and arbitrary bit shaped pattern

In general, physical layer receiver test focuses on providing a worst case signal to a FleyRay/CAN device and detecting whether the receiver is able to detect the signal properly; thus a known pattern has to be sent to the FlexRay receiver in order to compare it with the results received.

The Agilent 81150A with arbitrary bit shaped pattern allows emulating overshoot, asymmetric delay, and duty cycle distortion, up to 120 Mbit/s. Patterns can be easily set up and distorted at your fingertips.

The pattern option for the 81150A contains an activation of 16 Mbit pattern memory per channel.

Functionality like initialization sequences and three level signals help to set up the device into test and debugging mode. Proven stress tests with pseudo random binary sequences (PRBS) give a new insight into the device – fast and cost effective.

Figure 2. Distorted pattern generated by 81150A

Clock synchronization

Clock synchronization can be verified by adjusting the frequency of the generator, adding jitter, and changing the position of the individual frames that are being generated.

Bridge the Gap Between Physical and Protocol Layer Test – In Real Time

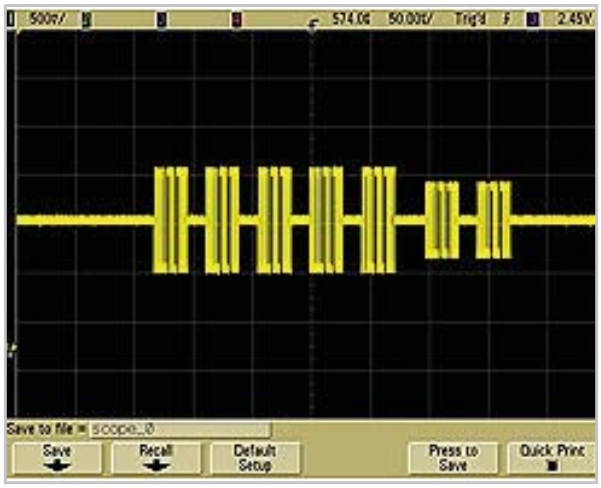

Figure 3. Two emulated nodes

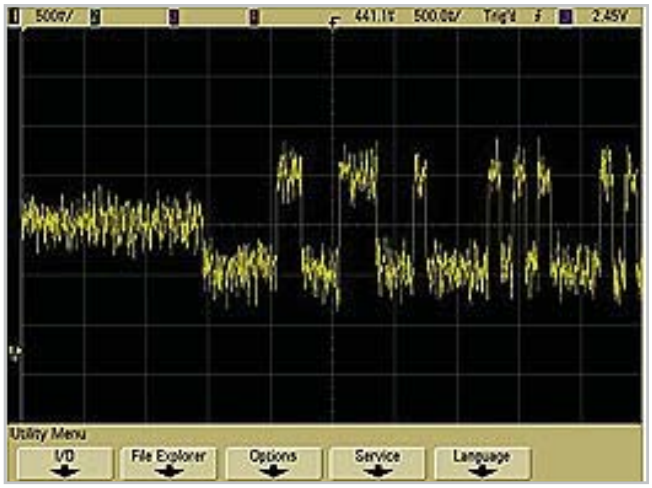

Figure 4.. Gaussian noise added to a FlexRay frame

Receiver sensitivity

Varying the differential output voltage level of the pattern generator, adding asymmetric delay, and varying the rise and fall times allows testing the sensitivity of the receiver. In order to verify a receiver's glitch rejection capability (majority voting) the generator can add glitches of adjustable amplitude and duration at deterministic points within a frame. Timing variations between nodes can be simulated. Typical robustness tests are:

- Changes of amplitude, offset violations
- Added noise or glitches
- Synchronization failures

The Agilent 81150A can emulate one or more nodes on the CAN or FlexRay bus, and can either act as a startup node or synchronize itself onto a running cluster using its external triggering capability.

Increase your test efficiency by combining physical layer with protocol layer tests

In addition to memory based internal data pattern and algorithmically generated PRBS patterns, digital data can be supplied from an external source, such as a protocol exerciser. The 81150A can pass through and re-shape the data in real-time.

External patterns are input via the MOD-IN input on the rear panel of the instrument.

The pass through pattern feature and distortion works in real time, up to 10 Mbit/s and is limited to three level signals. The set-up necessitates definition of threshold voltages to distinguish the levels from each other.

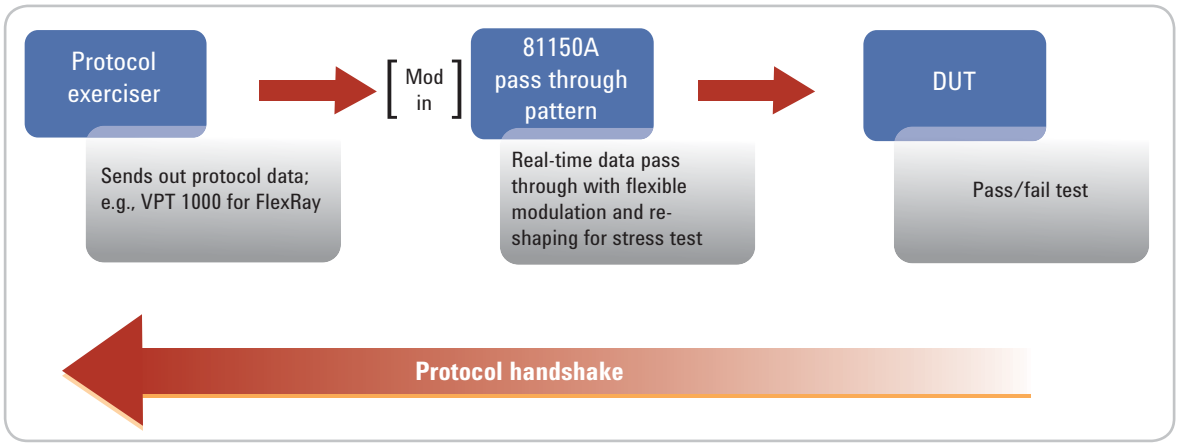

Figure 5. Distortion added to protocol data

Complementary Products to Complete the Solution

The **Agilent InfiniiVision 7000 Series oscilloscope** shows a more accurate representation of target signals than any other oscilloscope in its class, engineered with the best signal visibility. Quickly capture and analyze analog, digital, and serial signals in real time with fast and responsive MegaZoom III deep memory.

N5432A: FlexRay triggering and decode software. This solution offers a robust set of FlexRay frame, slot, and error triggering, including the ability to trigger on specific FlexRay communications qualified on base-cycle and cycle-repetition. This solution combines an Agilent MSO 7000 Series oscilloscope with the Agilent VPT 1000.

N5424A: This option allows you to **trigger** on either standard or extend CAN message ISDs, including the message ID of a remote transfer request frame. It supports triggering of a data frame and allows you to specify message IDs, data, and data length for filtering messages of interest. Triggering on active error frames is also supported.

Agilent VPT 1000 vehicle protocol tester. The vehicle protocol tester Series 1000 is Agilent's FlexRay solution, offering the fastest time-to-insight into the protocol. With reliable data capture, superior analysis, and visualization capabilities, you can focus on your design work and bring your product to market quickly and with the highest quality.

Related Literature

Publication title	Pub number
81150A Data Sheet	5989-6433EN
Pulse Pattern Generator Brochure	5980-0489EN
Precision Digital Noise Application Note	5989-9364EN
InfiniiVision 7000 Series Oscilloscopes, Data Sheet	5989-7763EN
J8130A VPT 1000, Data Sheet	5989-7589EN
Physical Layer Receiver Test for FlexRay / CAN Devices	5990-3160EN

www.agilent.com
www.agilent.com/find/81150

For more information on Agilent Technologies' products, applications or services, please contact your local Agilent office. The complete list is available at:

www.agilent.com/find/contactus

Americas

Canada	(877) 894-4414
Latin America	305 269 7500
United States	(800) 829-4444

Asia Pacific

Australia	1 800 629 485
China	800 810 0189
Hong Kong	800 938 693
India	1 800 112 929
Japan	0120 (421) 345
Korea	080 769 0800
Malaysia	1 800 888 848
Singapore	1 800 375 8100
Taiwan	0800 047 866
Thailand	1 800 226 008

Europe & Middle East

Austria	01 36027 71571
Belgium	32 (0) 2 404 93 40
Denmark	45 70 13 15 15
Finland	358 (0) 10 855 2100
France	0825 010 700*
	*0.125 €/minute
Germany	07031 464 6333
Ireland	1890 924 204
Israel	972-3-9288-504/544
Italy	39 02 92 60 8484
Netherlands	31 (0) 20 547 2111
Spain	34 (91) 631 3300
Sweden	0200-88 22 55
Switzerland	0800 80 53 53
United Kingdom	44 (0) 118 9276201
Other European Countries:	www.agilent.com/find/contactus

Revised: March 24, 2009

Product specifications and descriptions in this document subject to change without notice.

© Agilent Technologies, Inc. 2009
Printed in USA, May 11, 2009
5990-4062EN

Agilent Technologies