Quick Fact Sheet

Agilent Couplers

The Agilent couplers consists of hybrid coupler, broadband directional coupler, single directional coupler, and dual directional coupler. This is a complete line of coaxial single and dual port directional couplers, bridges for isolating, separating, and combining RF and microwave signals in applications such as power monitoring, source leveling, swept transmission, and reflection measurements.

775D

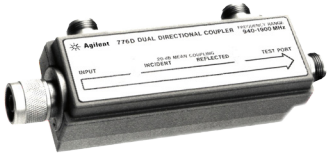

776D

777D

778D

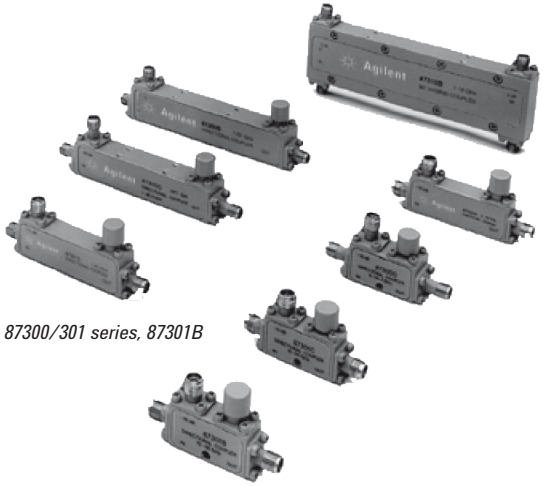

87300/301 series, 87301B

Key features

- Broadband couplers maximize your operating frequency up to 50 GHz
- Excellent directivity of min 40 dB for higher measurement accuracy
- Low SWR (< 1.1 dB) minimizes mismatch errors

Agilent Couplers

Product specifications

Model	Frequency range (GHz)	Coupling	Amplitude imbalance	Phase imbalance	Isolation	Maximum SWR (dB)	Insertion loss (dB)	Power rating average, peak	Connectors
Hybrid coupler									
87310B	1 to 18	3 dB	± 0.5 dB at each port, centered at –3 dB	± 10 degrees	> 17 dB	1.35	< 2.0	20 W, 3 kW	SMA (f)

Model	Frequency range (GHz)	Nominal coupling and variation (dB)	Directivity (dB)	Maximum SWR (dB)	Insertion loss (dB)	Power rating average, peak
Broadband directional coupler						
87300B	1 to 20	10 ± 0.5	> 16	1.35	< 1.5	20 W, 3 kW
87300C	1 to 26.5	10 ±1.0	> 14 to 12.4 GHz > 12 to 26.5 GHz	1.35 to 12.4 GHz 1.5 to 26.5 GHz	< 1.2 to 12.4 GHz < 1.7 to 26.5 GHz	20 W, 3 kW
87300D	6 to 26.5	10 ±0.5	> 13	1.4	< 1.3	20 W, 3 kW
87301B	10 to 46	10 ±0.7	> 10	1.8	< 1.9	20 W, 3 kW
87301C	10 to 50	10 ±0.7	> 10	1.8	< 1.9	20 W, 3 kW
87301D	1 to 40	13 ±1.0	> 14 to 20 GHz > 10 to 40 GHz	1.5 to 20 GHz 1.7 to 40 GHz	< 1.2 to 20 GHz < 1.9 to 40 GHz	20 W, 3 kW
87301E	2 to 50	10 ±1.0	> 13 to 26.5 GHz > 10 to 50 GHz	1.5 to 26.5 GHz 1.8 to 50 GHz	< 2.0	20 W, 3 kW
Single directional coupler						
773D [1]	2 to 18	20 ± 0.9	> 30 to 12.4 GHz > 27 to 18 GHz	1.2	< 0.9	50 W, 250 W
Dual directional coupler						
772D [1]	2 to 18	20 ± 0.9	> 30 to 12.4 GHz > 27 to 18 GHz	1.28 to 12.4 GHz 1.4 to 18 GHz	< 1.5	50 W, 250 W
775D [2]	0.45 to 0.94	20 ±1	> 40	1.15	< 0.40	50 W, 500 W
776D [2]	0.94 to 1.9	20 ±1	> 40	1.15	< 0.35	50 W, 500 W
777D [2]	1.9 to 4	20 ±0.4	> 30	1.2	< 0.75	50 W, 500 W
778D	0.1 to 2	20 ±1.5	> 36 to 1 GHz [3] > 32 to 2 GHz [3]	1.1	< 0.60	50 W, 500 W

1. *See data sheet for typical out of band data from 0.1 to 2 GHz and 18 to 20 GHz.*
2. *Maximum auxiliary arm tracking: 0.3 dB for Agilent 776D; 0.5 dB for Agilent 777D.*
3. *30 dB to 2.0 GHz, input port.*

Ordering information

Model	Option	Standard connector	
		Primary line	Auxiliary arm
772D	STD	APC-7, APC-7	N(f)
	001	N(f), N(f)	N(f)
773D	STD/101	APC-7, APC-7	N(f)
	001	N(f), N(f)	N(f)
	010	N(m), N(f)	N(f)
	002	N(f), N(m)	N(f)
775D/ 777D	STD	N(m), N(f)	N(f)
778D	STD	N(f), N(m)	N(f), N(f)
	011	APC-7, N(f)	N(f), N(f)
	012	N(m), N(f)	N(f)
87301D	240	2.4 mm(f), 2.4 mm(f)	2.4 mm(f)
	292	2.92 mm(f), 2.92 mm(f)	2.92 mm(f)
87300B	–	SMA (f), SMA (f)	SMA (f)
87300C	–	3.5 mm(f), 3.5 mm(f)	3.5 mm(f)
87300D	–	3.5 mm(f), 3.5 mm(f)	3.5 mm(f)
87301B	–	2.92 mm(f), 2.92 mm(f)	2.92 mm(f)
87301C	–	2.4 mm(f), 2.4 mm(f)	2.4 mm(f)
87301E	–	2.4 mm(f), 2.4 mm(f)	2.4 mm(f)
87310B	–	SMA (m), SMA (m)	SMA (m)

Download or order from **www.agilent.com/find/mta**

To find a distributor in your area, go to **www.agilent.com/find/distributors**

Recommended service options

Additional two years of Return-to-Agilent warranty
Additional two years of Return-to-Agilent calibrations
For more information go to **www.agilent.com/find/removealldoubt**

Technical data, availability, and pricing subject to change without notice.
© Agilent Technologies, Inc. 2012, Printed in USA, June 19, 2012
5990-5353EN

Agilent Technologies