Advanced Design System (ADS) Key Features

Innovative & industry-leading simulation technology

- Linear frequency domain simulator
- Harmonic balance non-linear frequency domain simulator
- X-parameter generator simulator
- Circuit envelope hybrid time/frequency domain non-linear simulator
- Transient/convolution time-domain simulator
- Signal Integrity Channel Simulator
- Agilent Ptolemy system simulator
- Momentum 3D planar electromagnetic simulator
- Finite Element full 3D electromagnetic simulator

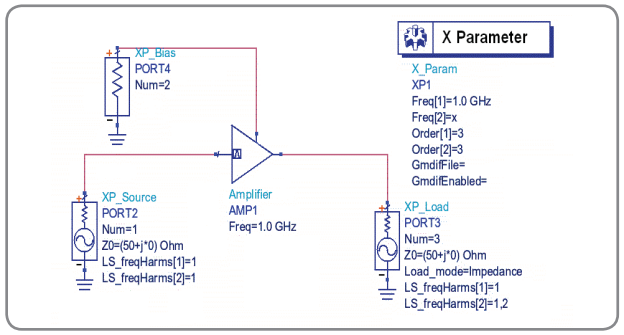

Figure 1: In Agilent's breakthrough X-parameter nonlinear model generation technology, an Agilent NVNA with Maury Load Pull produces an instant large signal model, which then can be dragged and dropped into Agilent's Advanced Design System software for circuit design and simulation. The model can also be created from simulation.

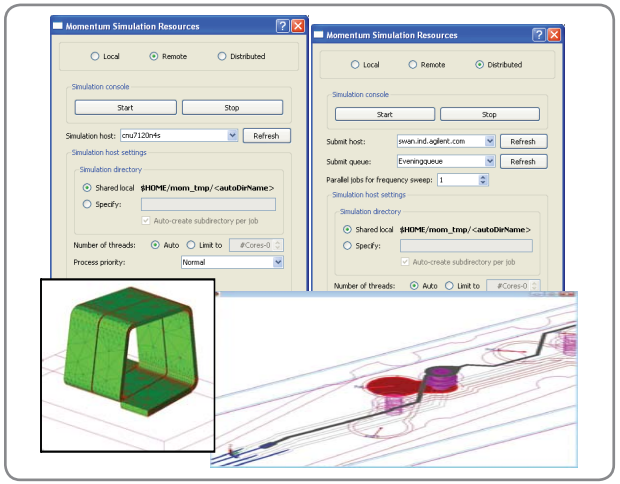

Figure 2: Enhanced Integrated 3D EM Analysis — including Finite Element EM sweeps, optimization and co-simulation with circuit analysis.

Additional simulation technologies

- Optimization cockpit
- RF system simulator (budget)
- Transient assisted harmonic balance
- Circuit-system co-simulation
- Circuit-EM co-simulation & optimization
- Statistical analysis & design (Monte Carlo, DFM, yield analysis & optimization)
- Integrated Spectrasys system simulator with spectral propagation and root cause Spectrasys analysis

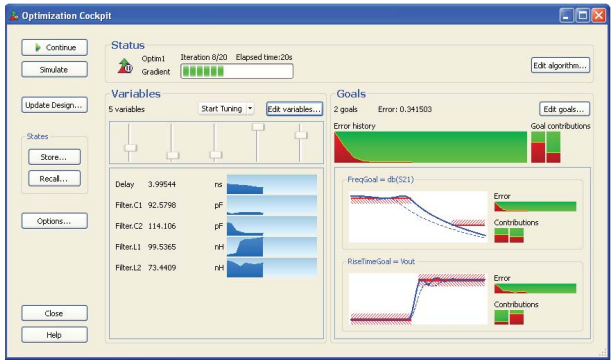

Figure 3: Optimization cockpit. The optimization cockpit is a new interactive environment (cockpit) that enables you to enter multiple optimization variables and goals and interactively tune and control the progress of the optimizer.

Synthesis tools

- LineCalc
- Integrated Genesys synthesis tools

Manufacturing output

- Layout
- 3D layout viewer
- ADS Desktop Design Rule Checker (DRC)
- ADS Desktop Layout Versus Schematic (LVS)
- Support for Cadence Calibre LVS, Assura and TriQuint MailDRC
- ODB++, Gerber, GDSII, IGES output and translators

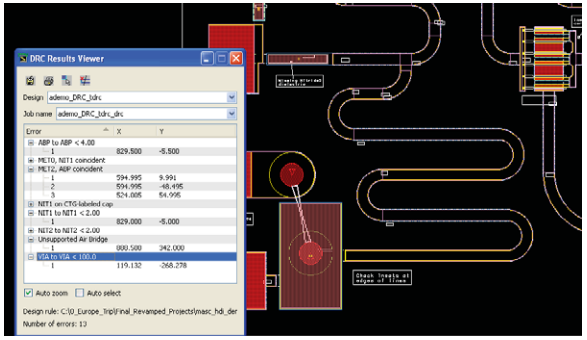

Figure 4: The (ADS) Desktop Design Rule Checker (DRC) enables high-frequency RF and microwave designers to verify and correct their layouts against foundry DRC rules before tape out.

Additional layout capabilities

- Schematic/layout design synchronization
- Electrical rule checks
- Schematic/layout design comparison
- Physical connectivity checker
- Package assembly tool

Agilent Technologies

Data Display capabilities

- 64-bit
- Antenna plot
- Multiple pages
- Datasets
- Equations
- Data Display instrument FrontPanels

Design flow integration

- Integration with Agilent EMPro Full 3D EM simulator & 3D EM
- Links to Mentor Boardstation
- Links to Mentor Expedition
- Links to Cadence Allegro
- Links to Cadence Virtuoso
- Links to Zuken CR5000
- Links to many other PCB, SiP and IC EDA tools via the industry
- Standard Agilent IFF format
- SPICE model generator
- Broadband SPICE model generator
- SPICE model import
- Verilog-A
- Component library builder

Foundry support

- Global Communication Semiconductors, Inc.
- IBM Semiconductor Solutions
- IHP Microelectronics
- OMMIC
- TowerJazz Semiconductor
- TriQuint Semiconductor
- United Monolithic Semiconductors (UMS)
- WIN Semiconductors Corporation and many more...

Component library support

Murata, GaAs FET models, Root FET, Curtice, Statz, EEFET3, EEHEMT, GaAs Bipolar, Agilent HBT, Silicon BJT models, Gummel-Pool BJT, EEBJT2, Phillips MEXTRAM, VBIC, Silicon MOSFET models, Root MOS, BSIM 3, BSIM 4, UCB MOS 2.3, Philips MOS model 9

Compact models

HICUM, PSP, Angelov GaN model, HiSiM, Root model

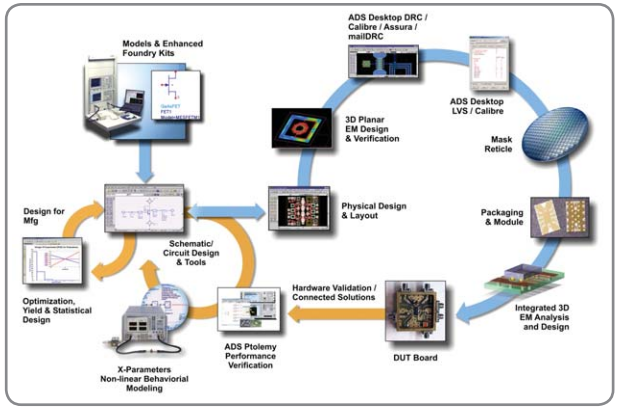

Figure 5: MMIC flow. Complete MMIC ADS Desktop flow concept, physical design to manufacturing.

Instrument integration & Connected Solutions

- Connection Manager
- Vector Signal Analyzer (VSA)/Glacier integration
- Agilent and other test equipment manufacturers

Application-focused DesignGuides

- Power Amplifier DesignGuide
- Load Pull DesignGuide
- Filter DesignGuide
- Phase Locked Loop DesignGuide
- Passive Circuit DesignGuide

Wireless standards libraries

HSPA, 3GPP-LTE, WiMedia, Fixed WiMax, Mobile WiMax, 3GPP FDD W-CDMA, DTMB/CMMB, CDMA, CDMA-1xEV, CDMA2000, Digital TV (DTV), EDGE, GSM, TD-SCDMA, WLAN

Platform/operating system support

Windows® XP, Windows® Vista & Windows® 7 Professional, Sun Solaris, RedHat, SuSe

High performance & distributed/parallel simulation

- 64-bit support (Momentum, Data Display/datasets, etc.)
- Multi-threaded support (Momentum, etc.)
- Parallel/distributed (Momentum, linear, Harmonic Balance, etc.)
- GPU hardware accelerated (Transient-Convolution simulator, etc.)

Platform customization via...

- Application Extension Language (AEL)
- Design guide developer's studio

Ptolemy integration

Matlab®, C++, SystemC

Additional key features

- Advanced Verification Model (AVM)
- Momentum RF Mode, Meshers, Solvers, Advanced Model Composer (AMC)
- RF Intellectual Property Encoder
- Smart sim UI
- Test benches
- TestLabs
- Tuning
- Wireless verification

www.agilent.com
www.agilent.com/find/eesof-ads

MATLAB is a U.S. registered trademark of The Math Works, Inc.

Technical data, and availability subject to change without notice.
© Agilent Technologies, Inc. 2010, Printed in USA, November 2, 2010

5990-6464EN

Agilent Technologies