# Agilent E1834E/G/J/M/Z Mounted Beam Delivery Optics

Data Sheet

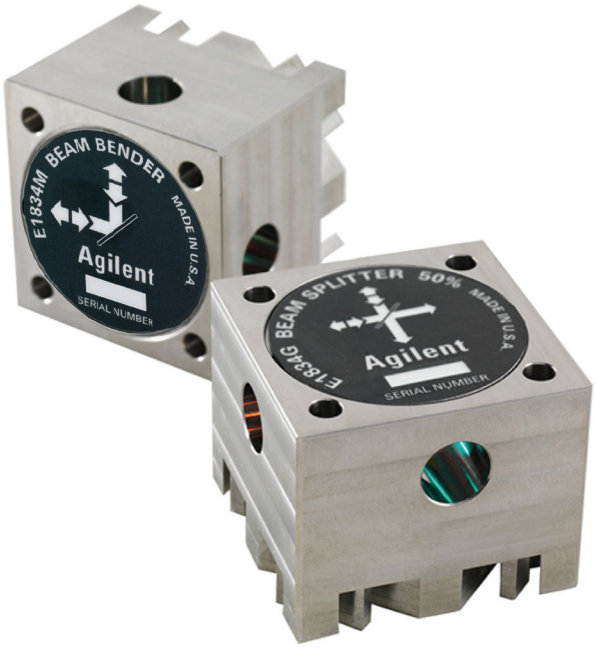


**The Agilent E1834 family of beam delivery optics uses high performance mounts to meet the pointing stability requirements of modern laser interferometer systems. These referenced optics are available in a variety of splitting percentages and mounting configurations for routing the laser beam throughout a measurement system.**

**Key Features:**

- **4 beam splitting percentages and 2 mounting configurations**
- **8 flexure feet designed for stable beam pointing**
- **416 stainless steel housing for low CTE**
- **11 mm clear aperture for up to 9 mm diameter laser beam**
- **Excellent reflected beam angle accuracy relative to machined datums**

Agilent Technologies

| Agilent Technologies E1834E/G/J/M/Z Mounted Beam Delivery Optics - Specifications | | |
|---|---|---|
| **Model** | **Beam Splitter Reflectivity** (non-polarizing; measured at 633 nm wavelength) | **Mount Configuration** |
| E1834E | 33% | Horizontal |
| E1834G | 50% | Horizontal |
| E1834J | 67% | Horizontal |
| E1834M | 100% | Horizontal |
| E1834Z | 100% | Vertical |
| **Optical Specifications** | | |
| Optical Efficiency* | ±5% (non-polarizing; measured at 633 nm wavelength) | |
| Input/Output Clear Aperture | 11.0 mm (for up to 9 mm laser beam) | |
| Reflected beam angle accuracy<br>Pitch<br>Yaw | <br>≤ 2.0 mradians<br>≤ 1.5 mradians | |
| Input beam Position Tolerance | ±1 mm for a 9 mm beam | |
| Thermal Stability | < 1 µrad/°C in the range of 20°C to 24°C<br>(mounted to customer frame with CTE ranging from invar to Al) | |
| **Environmental Specifications** | | |
| Operating Temperature Range | 20°C to 24°C | |
| **Mechanical Specifications** | | |
| Weight | 0.76 kg | |
| Materials:<br>Housing<br>Optics<br>Adhesives | <br>416 Stainless Steel<br>NBK-7 Optical Grade Glass<br>Low Volatility (Vacuum Grade) | |
| Fasteners | Qty4, M5x55 not included | |
| Resonance Frequency | >1 kHz | |
| Dimensions<br>overall LxWxH | see drawings below<br>55 mm x 55 mm x 45 mm | |
| Recommended customer frame<br>Surface Finish<br>Surface Profile<br>Mount | <br>0.8 µm<br>0.01 mm Datum A<br>(Avoid damage on the surface of the datums.)<br>Mount the unit with M5x55 mm screws, torque 4.74 N-m.<br>(screws not included) | |

# E1834E/G/J/M Transmission and Reflection Characteristics

E1843E

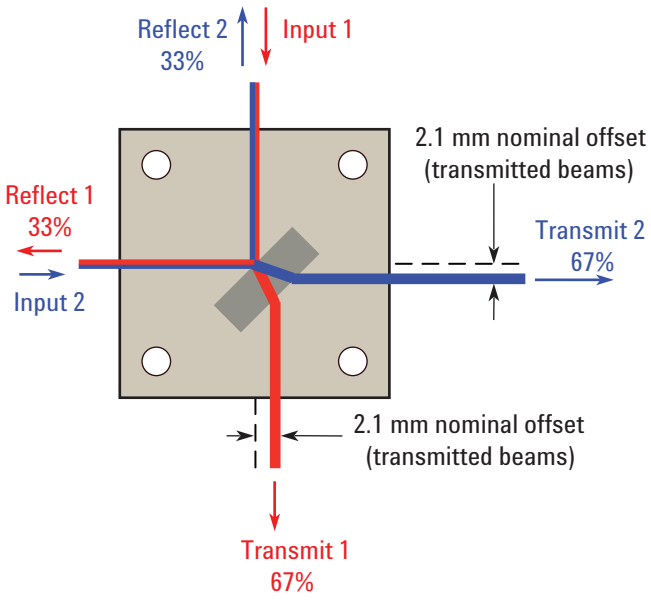


E1843G

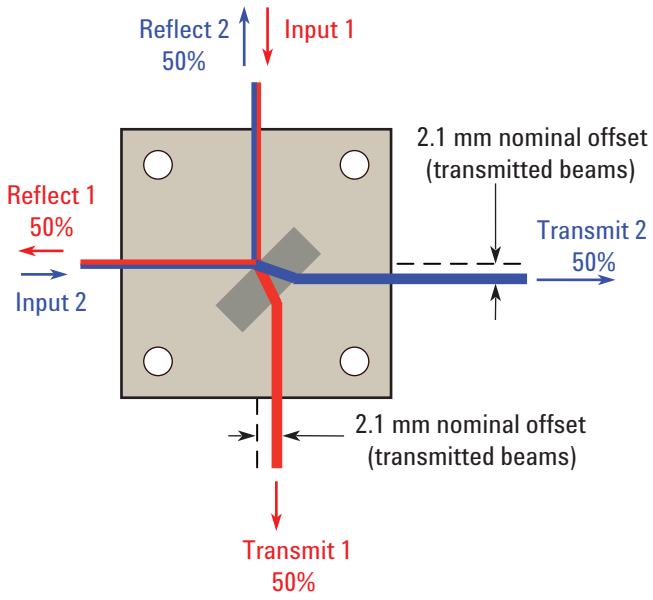


E1843J

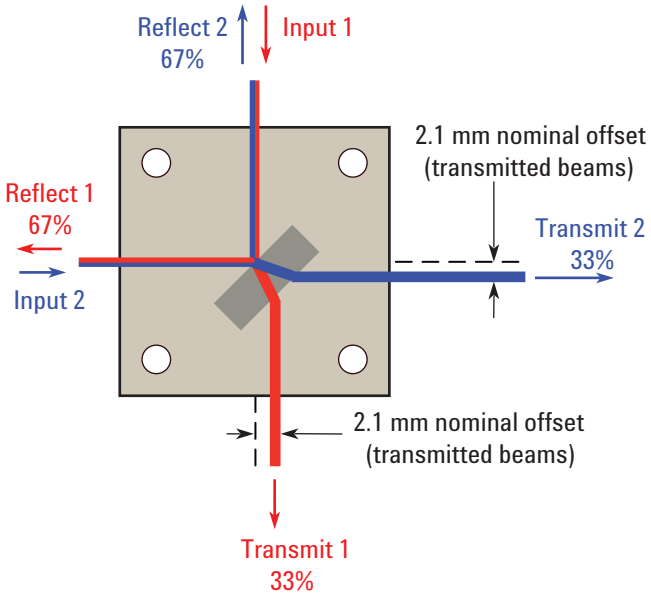


E1843M

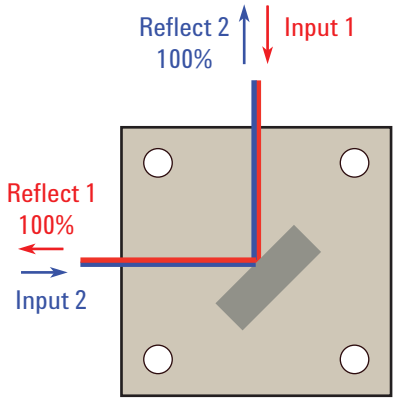

# E1834E/G/J Horizontal Mount

see “E1834E/G/J/M Datums - Detailed View”
for descriptions of Datums A B and C

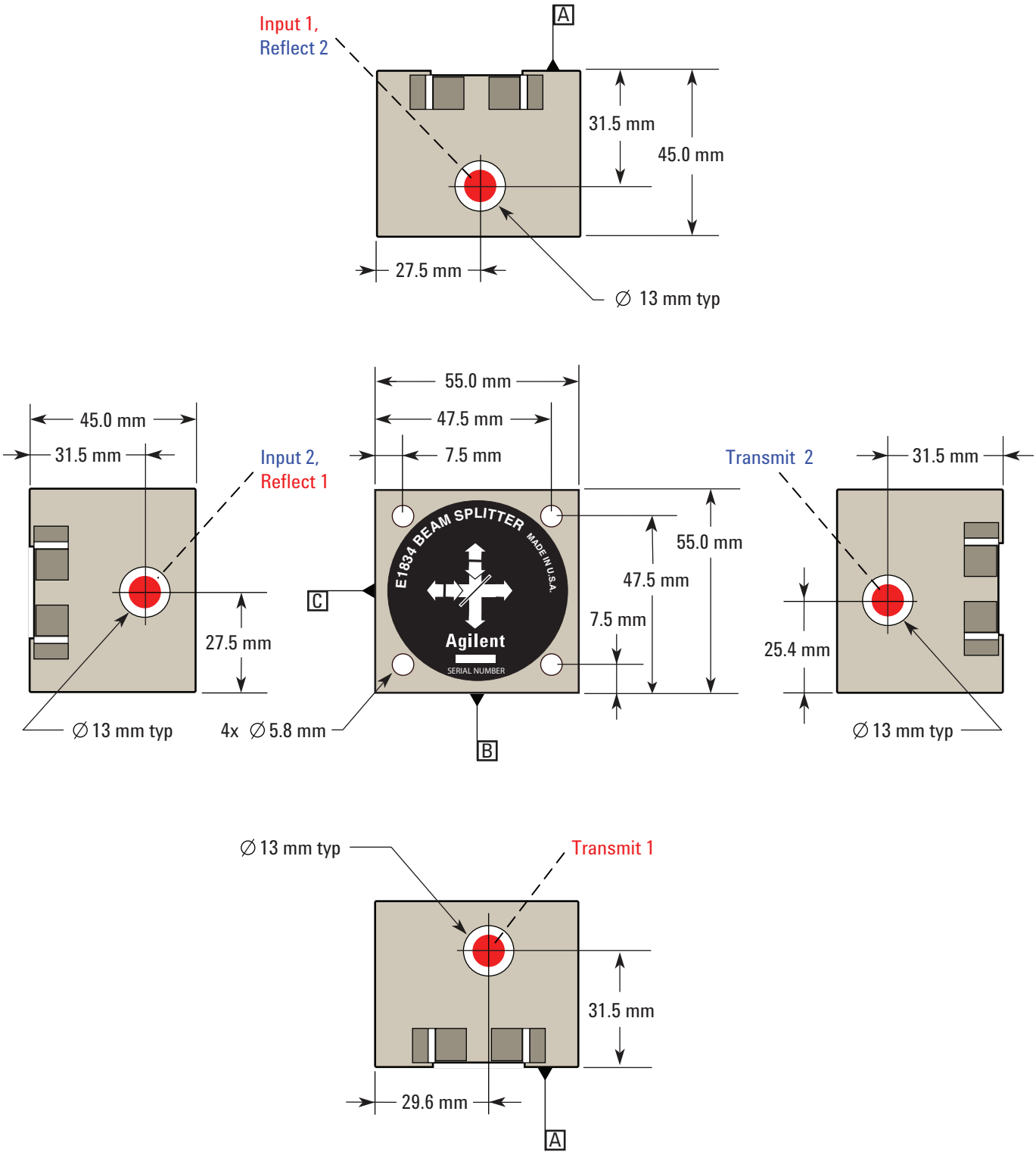

# E1834M Horizontal Mount

see "E1834E/G/J/M Datums - Detailed View"
for descriptions of Datums A B and C

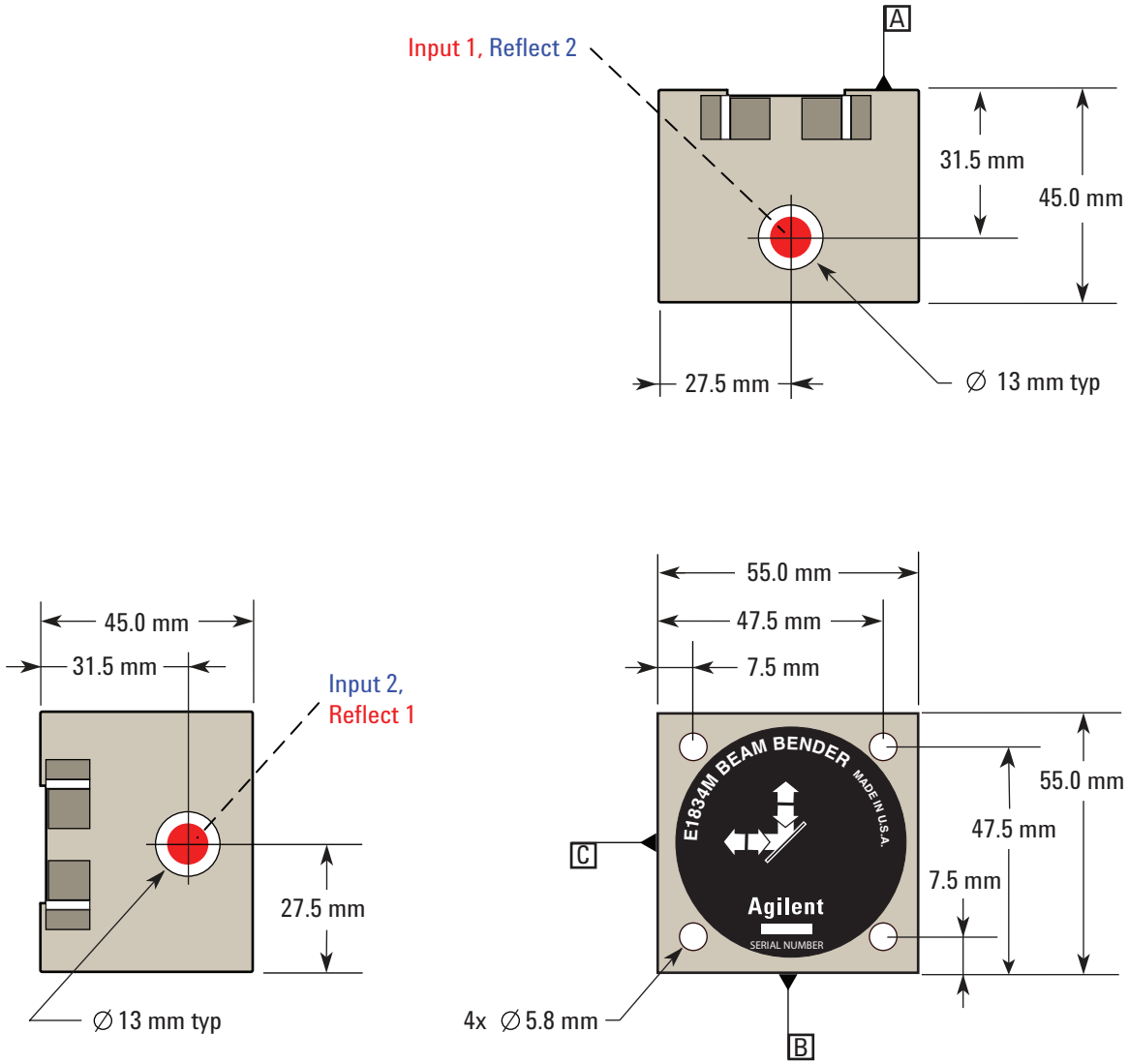

# E1834E/G/J/M Datums - Detailed View

Recommended registration pins:
∅ 6 mm rounded-top dowel pins, 5 mm above mounting surface

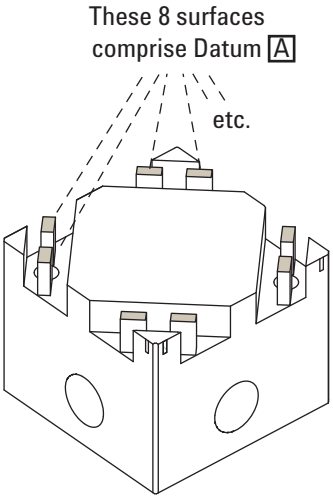


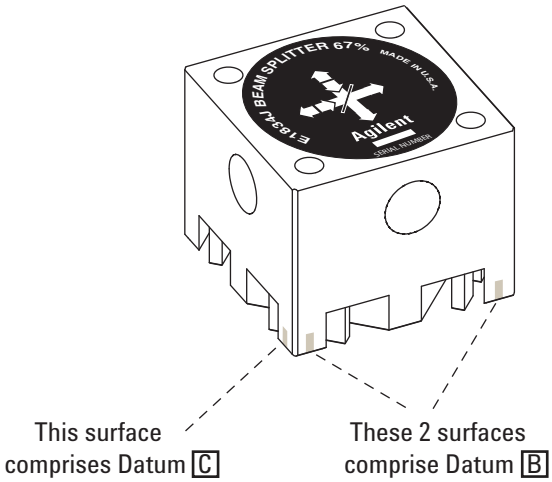


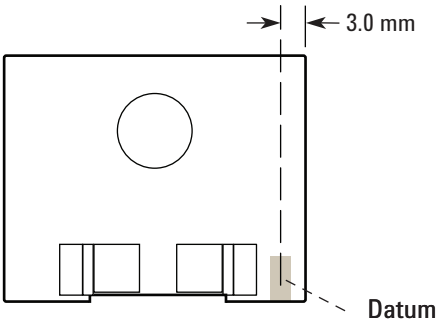


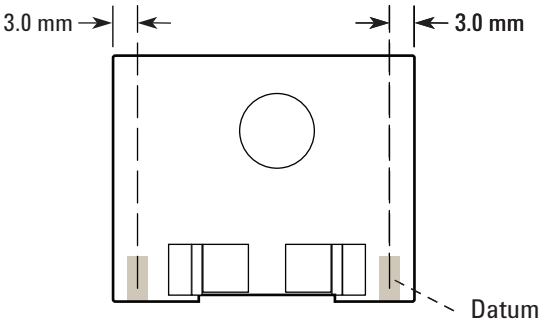

# E1834Z Vertical Mount

see “E1834Z Datums - Detailed View”
for descriptions of Datums A B and C

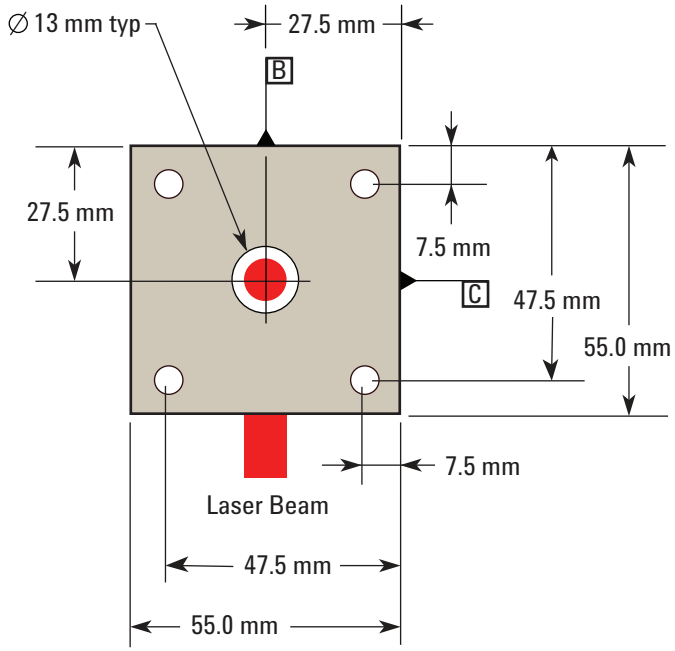


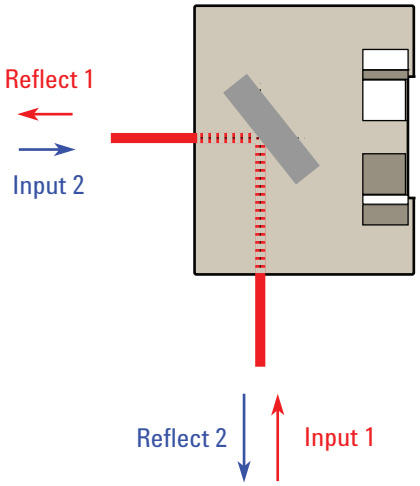


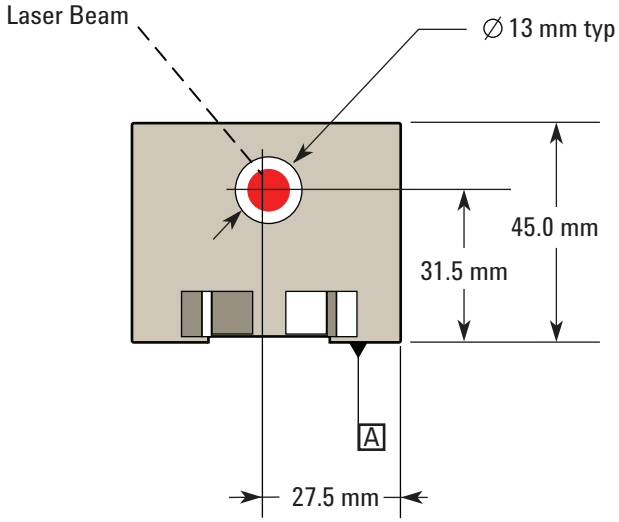


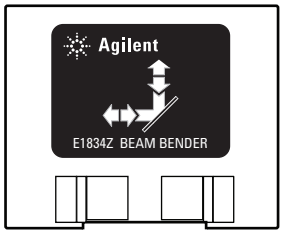

# E1834Z Datums - Detailed View

Recommended registration pins:
∅ 6 mm rounded-top dowel pins, 5 mm above mounting surface

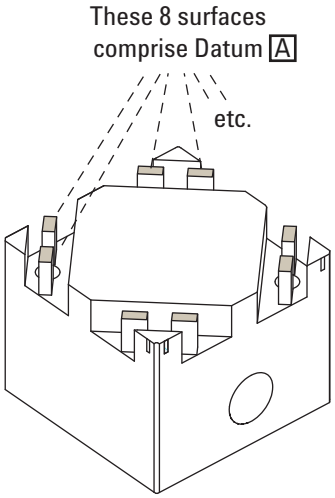


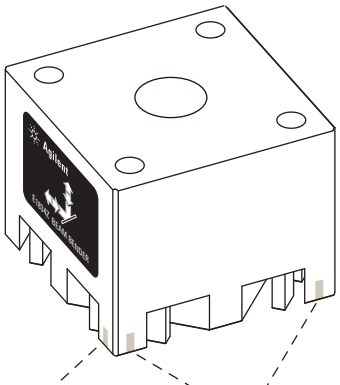


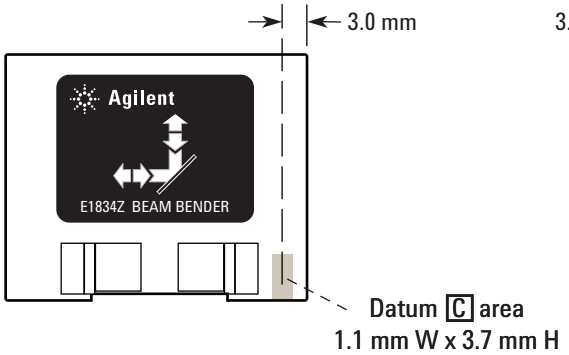


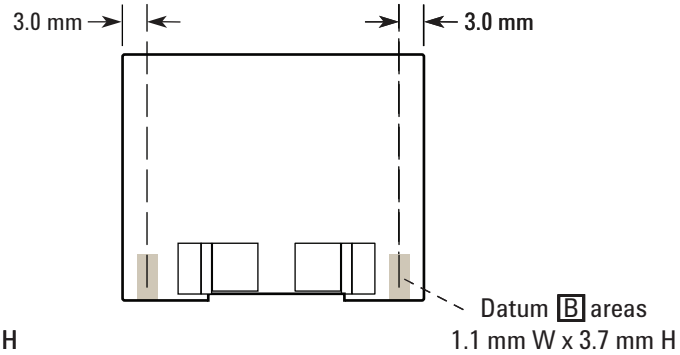

**Agilent Technologies' Test and Measurement Support, Services, and Assistance**
Agilent Technologies aims to maximize the value you receive, while minimizing your risk and problems. We strive to ensure that you get the test and measurement capabilities you paid for and obtain the support you need. Our extensive support resources and services can help you choose the right Agilent products for your applications and apply them successfully. Every instrument and system we sell has a global warranty. Support is available for at least five years beyond the production life of the product. Two concepts underlie Agilent's overall support policy: "Our Promise" and "Your Advantage."

**Our Promise**
Our Promise means your Agilent test and measurement equipment will meet its advertised performance and functionality. When you are choosing new equipment, we will help you with product information, including realistic performance specifications and practical recommendations from experienced test engineers. When you receive your new Agilent equipment, we can help verify that it works properly and help with initial product operation.

**Your Advantage**
Your Advantage means that Agilent offers a wide range of additional expert test and measurement services, which you can purchase according to your unique technical and business needs. Solve problems efficiently and gain a competitive edge by contracting with us for calibration, extra-cost upgrades, out-of-warranty repairs, and onsite education and training, as well as design, system integration, project management, and other professional engineering services. Experienced Agilent engineers and technicians worldwide can help you maximize your productivity, optimize the return on investment of your Agilent instruments and systems, and obtain dependable measurement accuracy for the life of those products.

## Agilent Email Updates

**www.agilent.com/find/emailupdates**
Get the latest information on the products and applications you select.

**Agilent T&M Software and Connectivity**
Agilent's Test and Measurement software and connectivity products, solutions and developer network allows you to take time out of connecting your instruments to your computer with tools based on PC standards, so you can focus on your tasks, not on your connections. Visit
**www.agilent.com/find/connectivity**
for more information.

**For more information on Agilent Technologies' products, applications or services, please contact your local Agilent office. The complete list is available at:**
**www.agilent.com/find/contactus**

**More information about Agilent Technologies' laser interferometric products and services is available at:**
**www.agilent.com/find/lasers**

### Phone or Fax


**United States:**
(tel) 800 829 4444
(fax) 800 829 4433

**Canada:**
(tel) 877 894 4414
(fax) 905 282 6495

**China:**
(tel) 800 810 0189
(fax) 800 820 2816

**Europe:**
(tel) 31 20 547 2111

**Japan:**
(tel) (81) 426 56 7832
(fax) (81) 426 56 7840

**Korea:**
(tel) (080) 769 0800
(fax) (080)769 0900

**Latin America:**
(tel) (305) 269 7500

**Taiwan**:
(tel) 0800 047 866
(fax) 0800 286 331

**Other Asia Pacific Countries:**
(tel) (65) 6375 8100
(fax) (65) 6755 0042
Email: tm_ap@agilent.com


Product specifications and descriptions in this document subject to change without notice.


© Agilent Technologies, Inc. 2011


Printed in USA, January 18, 2011
5990-6651EN


**Agilent Technologies**