Agilent M9352A PXI Hybrid Amplifier/Attenuator

DISCOVER the Alternatives...

Industries and Applications

- Aerospace/defense
- Wireless communications
- Radar and wideband signal capture

... Agilent **Modular** Products

Product Description

The Agilent M9352A is a one-slot, 4-channel, PXI Hybrid IF Amplifier/Attenuator with 1 GHz analog bandwidth providing excellent IF signal conditioning for use in multi-channel modular solutions.

Combine with the M9362A-D01 PXI Quad Downconverter, up to four M9202A IF Digitizers, and a local oscillator for wideband signal capture where multiple channels are required for applications such as multi-channel coherent signal analysis.

Models	
M9352A	PXI Hybrid Amplifier/Attenuator Module

Main Features and Benefits

Product features	Your benefits
Frequency range	10 MHz to 1 GHz
Multiple programmatic interfaces	Easy integration into existing test environments and reduced development time
PXI form-factor	Conforms to Modular Open Systems Approach

Chassis slot compatibility: cPCI (J1), PXI-1, PXIe hybrid

Characteristic Performance

Hardware	
Size	One-slot
Channels	4
Bandwidth	1 GHz analog
Attenuation Range	31.5 dB in .5 dB steps
Minimum Gain: Maximum Gain:	≥ 5 dB ≥ 36 dB
Noise Figure	3 dB
Input TOI	+43 dBm

Agilent Technologies

Software Information

The M9352A PXI Amplifier/Attenuator module is supplied with a comprehensive portfolio of module drivers, documentation, examples and software tools to help you quickly develop test systems with your software platform of choice.

A soft front panel interface is provided to monitor and control the amplifier/attenuator with the following functions:

- Setting gain values
- Monitoring hardware status

Supported operating systems	Microsoft Windows® XP (32-bit) Microsoft Windows® 7 (32/64-bit)
Standard compliant drivers	IVI-COM, IVI-C, LabVIEW, MATLAB
Supported application development environments (ADE)	VisualStudio® (VB.NET, C#, C/C++), VEE, LabWindows/CVI, MATLAB
Agilent IO Libraries	Includes: VISA Libraries, Agilent Connection Expert, IO Monitor

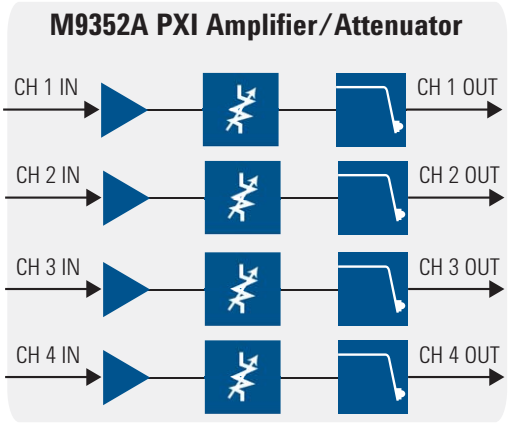

Figure 1. Block diagram of M9352A PXI 4-channel amplifier/attenuator module

Ordering Information

Typical Product Configuration	
Model	Description
M9352A	PXI Amplifier/Attenuator Module: 1 GHz

Related Products	
M9018A	18-slot PXIe Chassis
M9036A	PXIe Embedded PC Controller
M9202A	PXIe IF Digitizer: 12-bit, 2 GS/s (with options CO1, FO2, MO5, DDC)
M9202A-V05	50 MHz BW Streaming
M9202A-V10	100 MHz BW Streaming
M9302A	PXI Local Oscillator: 3 GHz to 10 GHz
M9362A-D01	PXIe Quad Downconverter: 10 MHz to 26.5 GHz
M9362AD01-CA1	IF Jumper Cables for use with 4-M9202A Single CH Digitizers
M9362AD01-CA2	IF Jumper Cables for use with 2-M9202A Dual CH Digitizers
M9362AD01-CA3	IF Jumper Cables for use with the M9210A
M9362AD01-CA4	LO Interconnect Kit for use with the M9302A

Accessories
Software, example programs, product information on CD (included)
SMB to SMA Cables (eight included)

Discover Agilent ....

www.agilent.com
www.agilent.com/find/modular
USA: (800) 829-4444

For more information on Agilent Technologies' products, applications, or services, please contact your local Agilent office. The complete list is available at: **www.agilent.com/find/contactus**

Product specifications and descriptions in this document subject to change without notice.

February 10, 2012
5990-9899EN

Agilent Technologies