Agilent M9362A-D01

PXIe Quad
Downconverter
10 MHz to 26.5 GHz

Configuration Guide

Challenge the Boundaries of Test
Agilent Modular Products

Anticipate ___Accelerate ___Achieve

Agilent Technologies

OVERVIEW

This configuration guide contains a step-by-step process to help you configure your wideband MIMO PXI Vector Signal Analyzer and customize the system to meet your requirements.

For more detailed product and specification information refer to Agilent's M9362A-D01 literature and web pages:

- *M9362A-D01 Datasheet* (literature no. 5990-6624EN)
- *M9362A-D01 Flyer* (literature no. 5990-6575EN)
- *Wideband MIMO PXI VSA Flyer (literature no. 5991-1213EN)*
- *Wideband MIMO PXI VSA Multichannel Wideband Configuration White Paper (literature no. 5991-0135EN)*

Configuration Steps

- Select your signal analyzer modules
- Select your chassis
- Select your accessories
- Select your software
- Select your services

Expand Your Solution

- Configure a streaming solution

Figure 1. 3-channel PXI vector signal analyzer in an M9018A PXI chassis

Figure 2. Agilent 89600 VSA software display of a 2-channel 802.11ac 80 MHz demodulated signal

www.agilent.com/find/pxi-vsa

CONFIGURE YOUR MULTICHANNEL PXI VECTOR SIGNAL ANALYZER

Step 1. Select your signal analyzer modules

Description	Number of slots used	Additional information
Downconverter (required)		
M9362A-D01 PXIe Quad Downconverter	3	1 module enables 1 to 4 channels. Includes 1-day of startup assistance.
Digitizer (required)		
M9202A[1] PXIe IF digitizer	1 per channel	1 module for each channel Required options: C01, F02, M05, DDC
RF Signal Conditioning (recommended)		
M9168C PXIe Attenuator	2 per channel	1 module for each channel
IF Signal Conditioning (recommended)		
M9352A PXI Hybrid IF Amp/Attn	1 per channel	1 module for 1 to 4 channels Required option: H01
Local Oscillator (required—choose one)		
M9302A PXI LO	2	1 module for 1 to 3 channels 100 MHz clock for digitizer sync is included in the M9302A For RF frequencies 2.25 GHz to 26.5 GHz 3 channels VSA in one chassis (with M9168C attenuator)
N5182A MXG Vector Signal Generator	Not PXI	1 instrument for 1 to 4 channels 100 MHz clock for digitizer sync still needs to be provided. M9300A frequency reference is recommended. For RF frequencies 10 MHz to 26.5 GHz[2] Up to 4 channels VSA in one chassis

1. M9202A options:

- *Option C01: single channel operation*
- *Option F02: frequency range, 2 GS/s (sampling rate)*
- *Option M05: standard memory of 512 MB*
- *Option DDC: In addition to basic digitizer functionality, implements a digital down conversion algorithm in the 300 MHz to 700 MHz band improving the analog performance such as spurious free dynamic range (SFDR) or signal to noise ratio (SNR) and reduces data upload time.*
- *Option V05: 50 MHz BW Streaming*
- *Option V10: 100 MHz BW Streaming*

2. For frequencies below 1.2 GHz, bandwidth may be limited and filtering after the downconverter may be required to eliminate RF and LO leakage

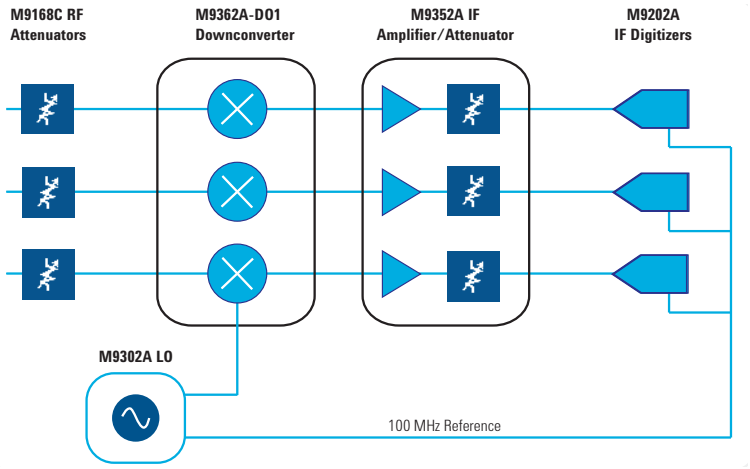

Figure 3. 3-channel PXI vector signal analyzer simplified diagram

CONFIGURE YOUR PXI VECTOR SIGNAL ANALYZER

Step 2. Select your chassis

Description	Number of slots available	Additional information
M9018A PXIe Chassis	18	Standard filler panels are included (enough to fill the entire chassis). EMC filler panels must be ordered separately (see accessories)

Step 3. Select your accessories

Description	Required	Additional information
M9036A PXIe Embedded Controller		3-slot wide
M9021A PXIe Cable Interface: Gen 2, x8		1-slot wide
M9045B PCIe ExpressCard Adaptor: Gen 1		
Y1200B PCIe Cable: x4 to x8 2.0 m		Used with M9045B
M9048A PCIe Desktop PC Adaptor: Gen 2, x8		
Y1202A PCIe Cable: x8, 2.0 m		Used with M9048A
Y1215A Chassis Rack Mount Kit		
Y1213A EMC Filler Panels (5 single slot/set)		If an M9392A is ordered, 3 sets are required to fill empty slots
Y1240A Option 001: 2-Channel Trigger Distribution Kit	2-channel configurations	Kit includes required cables for 2-channel trigger distribution not shipped with modules
Y1240A Option 002: 3 and 4 Channel Trigger Distribution Kit	3 and 4 channel configurations	Kit includes required cables for 3 or 4 channel trigger distribution not shipped with modules
Y1240A Option 003: 3 and 4 Channel 100 MHz Distribution Kit	3 and 4 channel configurations	Kit includes required cables for 3 or 4 channel 100 MHz distribution not shipped with modules
Y1240A Option 004: LO Distribution Kit	All configurations	Kit includes required cables for LO distribution not shipped with modules
Y1240A Option 005: 2-Channel RF Distribution Kit	Qty 1 for 2-channel Qty 2 for 3 or 4 channel	Kit includes required cables for 2-channel RF distribution not shipped with modules. Order 2 kits for 3 or 4 channel configurations
M9018A-903 U. S. Power Cord for M9018A Chassis		This is an IEC 320-1 C19 style high-power cord

CONFIGURE YOUR PXI VECTOR SIGNAL ANALYZER (CONT'D)

Step 4. Select your software

Description	Additional Information
89601B VSA Software, transportable license[1]	Optional
89601B-200 Basic Vector Signal Analyzer	Required for use with PXI VSA
89601B-300 Hardware Connectivity option	Required for use with PXI VSA
89601B-AYA Vector Modulation Analysis	
M9392A software	Download from Agilent.com to enable connectivity to 89600 VSA software

Step 5. Select your services

Description	Additional Information
Annual calibration	R1282A
Additional AE (Application Engineer) consulting	PS-S20-01
Return to Agilent Warranty - 5 years	R-51B-001-5C
Express Warranty - 5 day turnaround for 3 years	R1603-A-003
Express Warranty - 5 day turnaround for 5 years	R1603-A-005

1. *See 89600 VSA Software Configuration Guide, literature no. 5990-6386EN for more information.*

PHYSICAL CONNECTIONS

LAPTOP PC

Product
Laptop computer[1]
M9045B PCIe ExpressCard adaptor: Gen 1
Y1200B PCIe cable: x 4 to x 8 2.0 m
M9021A PXIe cable interface: Gen 2, x8
Multichannel PXI Vector Signal Analyzer modules
M9018A PXIe Chassis

1. *For a list of computers compatible with Agilent Technologies PXI chassis, refer to* Tested Computer Technical Note *(literature no. 5990-7632)*

Embedded PC

Product
M9036A Embedded Controller
Multichannel PXI Vector Signal Analyzer
M9018A PXIe Chassis

DESKTOP OR RACKMOUNT PC

Product
Desktop or rack mount PC[1]
M9048A PCIe adaptor
Y1202A PCIe cable: x8
M9021A PXIe cable interface: Gen 2, x8
M9018A PXIe Chassis
Multichannel PXI Vector Signal Analyzer modules

1. *For a list of computers compatible with Agilent Technologies PXI chassis, refer to* Tested Computer Technical Note *(literature no. 5990-7632)*

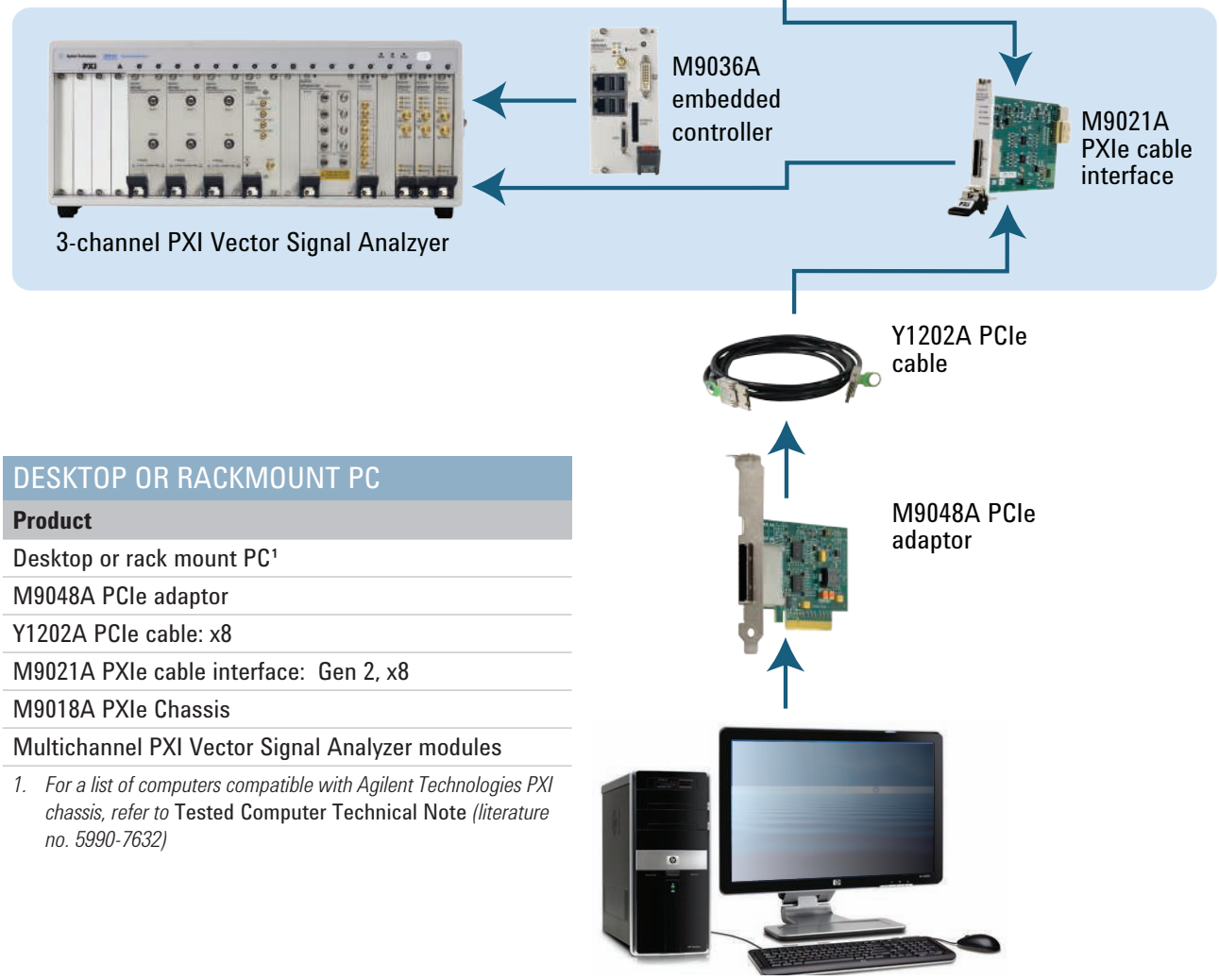

Figure 4. M9018A PXI chassis with M9392A PXI vector sector analyzer, and M9036A embedded controller

PHYSICAL CONNECTIONS (CONT)

Cable and module table

Some cables are shipped with modules, others are available in cable kits. The following diagram and table describe those cables and their required connections. Torque specification for all SMA connectors is 8 lb/in (0.904 Nm).

2-Channel Configuration		
Ref Des	**Connection**	**Description**
Y1240A Option 005:	2-Channel RF Distribution Kit	
A1	M9168C Port 2 to M9362A-D01 RF IN	Cable assembly—12 inch SMA [SMA (m) – SMA (m)]
A2	M9168C Port 2 to M9362A-D01 RF IN	Cable assembly— 9 inch SMA [SMA (m)– SMA (m)]
Y1240A Option 004:	LO Distribution Kit	
C1	M9302A LO OUT to 10 dB attenuator	Cable assembly—6 inch SMA [SMA (m) – SMA (m)
C2	M9362A-D01 LO IN	Coaxial attenuator—18 GHz MAX 2.0 Watt SMA
T1	Connect to LO OUT on M9362A-D01 and open ports	50 Ω termination—RF SMA (m) straight
Y1240A Option 001:	2-Channel Trigger Distribution Kit	
E1	M9202A trig OUT to TEE	Cable assembly—coaxial, 50 Ω, A06/A32 80 mm-LG [SMB – MMCX (f)]
E2		Adapter—coaxial TEE, SMB (m), SMB (m) SMB (m)
E4	M9202A Trig 2	Cable assembly—coaxial, 50 Ω, A12/A32, 240 mm-LG [MMCX-SMA (m)]
Cables included with modules		
B1	M9362A-D01 IF OUT to M9352A IN	Cable—A06/A12 190 G SMA (m) – SMB (f)
B2	M9352A OUT to M9202A IN	Cable—A06/A12 190 G SMA (m) – SMB (f)
D1	M9302A 100 MHz to Splitter	Cable assembly—coaxial, A07/A07, 50 Ω, SMB (f) — SMB (f) 75 MM-LG
E3	TEE to Trig IN on M9202A	Cable assembly—coaxial, 50 Ω, A06/A32, 80 mm-LG [SMB–MMCX (f)]

PHYSICAL CONNECTIONS

2-Channel Configuration (cont)

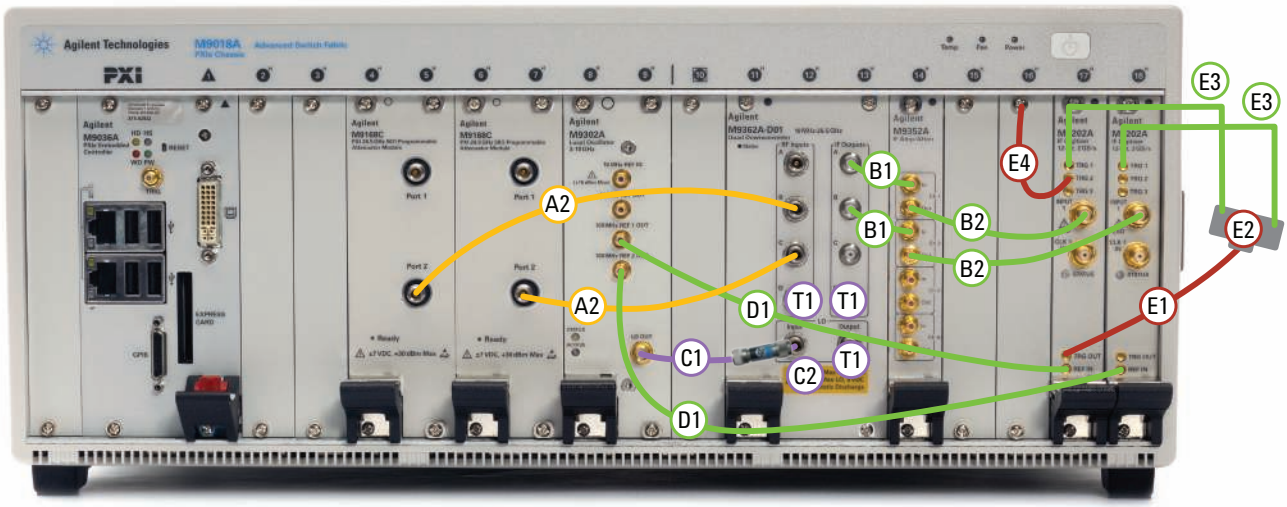

System Configuration					
Slot number	**Model**	**Description**	**Slot number**	**Model**	**Description**
0-1	M9036A	embedded controller	11-13	M9362A-DO1	quad downconverter
2-3	empty		14	M9352A	amplifier/attenuator
4-5	M9168C	programmable attenuator	15-16	empty	
6-7	M9168C	programmable attenuator	17	M9202A	digitizer
8-9	M9302A	local oscillator	18	M9202A	digitizer
10	empty				

Figure 5. 2-channel PXI analyzer showing cable connections

PHYSICAL CONNECTIONS (CONT)

3-Channel Configuration		
Ref Des	**Connection**	**Description**
Y1240A Option 005:	2-Channel RF Distribution Kit	
A1	M9168C Port 2 to M9362A-D01 RF IN	Cable assembly—12 inch SMA [SMA (m) – SMA (m)]
A2	M9168C Port 2 to M9362A-D01 RF IN	Cable assembly—12 inch SMA [SMA (m) – SMA (m)]
Y1240A Option 004:	LO Distribution Kit	
C1	M9302A LO OUT to 10 dB attenuator	Cable assembly—6 inch SMA [SMA (m) – SMA (m)
C2	M9362A-D01 LO IN	Coaxial attenuator—18 GHz MAX 2.0 Watt SMA
T1	Connect to LO OUT on M9362A-D01 and open ports	50 Ω termination—RF SMA (m) straight
Y1240A Option 003:	3 and 4-Channel 100 MHz Distribution Kit	
D2	M9302A 100 MHz to splitter	Cable assembly—coaxial A07/A07, 50 Ω, SMB (f) — SMB (f) 75 MM-LG
D3		Adapter—coaxial TEE, SMB (m), SMB (m) SMB (m)
D4	Connect to splitter D3	Connector—RF SMB (f), 50 Ω, 6 GHz max
Y1240A Option 002:	**3 and 4-Channel Trigger Distribution Kit**	
E1	M9202A trig OUT to TEE	Cable assembly—coaxial, 50 Ω, A06/A32 80 mm-LG [SMB – MMCX (f)]
E2		Adapter—coaxial TEE, SMB (m), SMB (m) SMB (m)
E4	M9202A Trig 2	Cable assembly—coaxial, 50 Ω, A12/A32, 240 mm-LG [MMCX-SMA (m)]
E5	Connection between TEEs	Cable assembly—coaxial, A07/A07, 50 Ω, SMB (f) — SMB (f) 75 MM-LG
E6	Connect to TEE E4	Connector—RF coxial SMB (f), 50 Ω, 6 GHz max
Cables included with modules		
B1	M9362A-D01 IF OUT to M9352A IN	Cable—A06/A12 190 G SMA (m) – SMB (f)
B2	M9352A OUT to M9202A IN	Cable—A06/A12 190 G SMA (m) – SMB (f)
D1	M9302A 100 MHz to Splitter	Cable assembly—coaxial, A07/A07, 50 Ω, SMB (f) — SMB (f) 75 MM-LG
E3	TEE to Trig IN on M9202A	Cable assembly—coaxial, 50 Ω, A06/A32, 80 mm-LG [SMB–MMCX (f)]

PHYSICAL CONNECTIONS

3-Channel Configuration (cont)

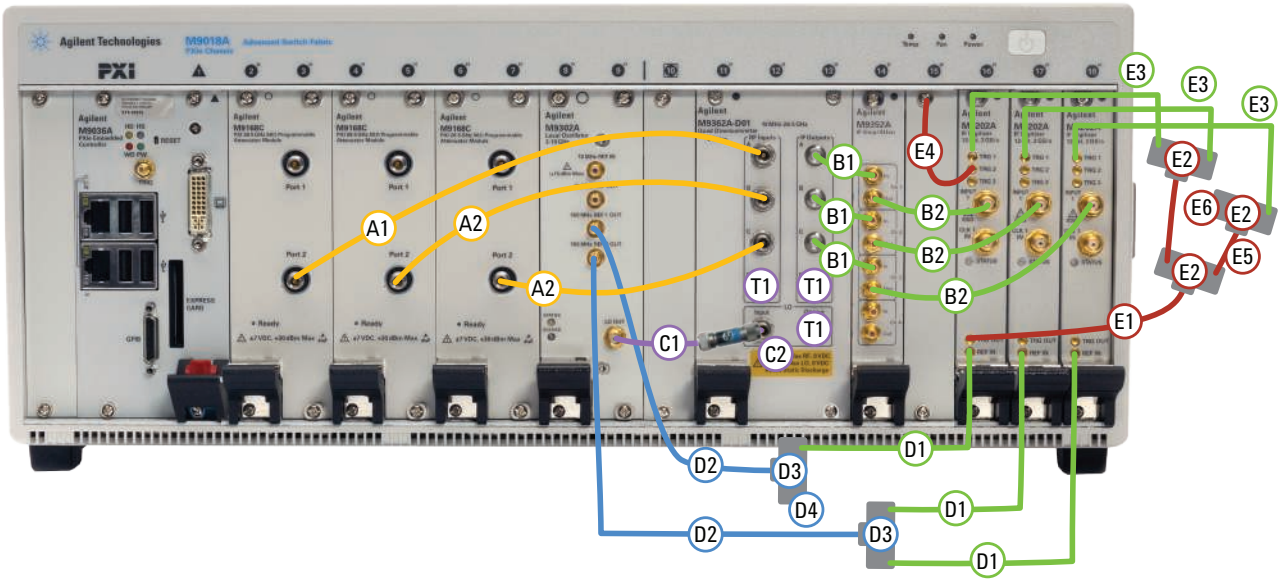

System Configuration					
Slot number	**Model**	**Description**	**Slot number**	**Model**	**Description**
0-1	M9036A	embedded controller	11-13	M9362A-DO1	quad downconverter
2-3	M9168A	programmable attenuator	14	M9352A	amplifier/attentuator
4-5	M9168A	programmable attenuator	15	empty	
6-7	M9168A	programmable attenuator	16	M9202A	digitizer
8-9	M9302A	local oscillator	17	M9202A	digitizer
10	empty		18	M9202A	digitizer

Figure 6. 3-channel PXI Analyzer showing cable connections

TECHNICAL SPECIFICATIONS

All specifications are nominal unless otherwise noted.

System requirements		
Operating systems	Windows XP, Service Pack 3 or later (32-bit) [1]	Windows 7 (32-bit and 64-bit) Starter, Home Basic, Home Premium, Professional, Ultimate, Enterprise
Processor speed	600 MHz or higher required 800 MHz recommended	1 GHz 32-bit (x86), 1 GHz 64-bit (x64), no support for Itanium 64
Available memory	256 MB minimum (1 GB or greater recommended)	1 GB minimum [2]
Available disk space [1]	1.5 GB available hard disk space, includes: • 1 GB available for Microsoft.NET Framework 3.5 SP1[2] • 100 MB for Agilent IO Libraries Suite	1.5 GB available hard disk space, includes: • 1 GB available for Microsoft.NET Framework 3.5 SP1[2] • 100 MB for Agilent IO Libraries Suite
Video	Super VGA (800x600) 256 colors or more	Support for DirectX 9 graphics with 128 MB graphics memory recommended (Super VGA graphics is supported)
Browser	Microsoft Internet Explorer 6.0 or greater	Microsoft Internet Explorer 7 or greater

1. Because of the installation procedure, less memory may required for operation than is required for installation.
2. NET Framework Runtime Components are installed by default with Windows Vista and Windows 7. Therefore, you may not need this amount of available disk space

The Modular Tangram

The four-sided geometric symbol that appears in this document is called a tangram. The goal of this seven-piece puzzle is to create identifiable shapes—from simple to complex. As with a tangram, the possibilities may seem infinite as you begin to create a new test system. With a set of clearly defined elements—hardware, software—Agilent can help you create the system you need, from simple to complex.

Challenge the Boundaries of Test
Agilent Modular Products

www.pxisa.org

www.axiestandard.org

myAgilent
www.agilent.com/find/myagilent

Agilent Advantage Services
www.agilent.com/find/advantageservices

Three-Year Warranty
www.agilent.com/find/ThreeYearWarranty

DEKRA Certified ISO 9001:2008 **www.agilent.com/quality**

Agilent Solutions Partners
www.agilent.com/find/solutionspartners

www.agilent.com
www.agilent.com/find/modular
www.agilent.com/find/m9362a-d01
www.agilent.com/find/pxi-vsa-mimo

For more information on Agilent Technologies' products, applications or services, please contact your local Agilent office. The complete list is available at: **www.agilent.com/find/contactus**

Americas

Canada	(877) 894 4414
Brazil	(11) 4197 3500
Mexico	01800 5064 800
United States	(800) 829 4444

Asia Pacific

Australia	1 800 629 485
China	800 810 0189
Hong Kong	800 938 693
India	1 800 112 929
Japan	0120 (421) 345
Korea	080 769 0800
Malaysia	1 800 888 848
Singapore	1 800 375 8100
Taiwan	0800 047 866
Other AP Countries	(65) 375 8100

Europe & Middle East

Belgium	32 (0) 2 404 93 40
Denmark	45 70 13 15 15
Finland	358 (0) 10 855 2100
France	0825 010 700*
	*0.125 €/minute
Germany	49 (0) 7031 464 6333
Ireland	1890 924 204
Israel	972-3-9288-504/544
Italy	39 02 92 60 8484
Netherlands	31 (0) 20 547 2111
Spain	34 (91) 631 3300
Sweden	0200-88 22 55
United Kingdom	44 (0) 118 9276201
For other unlisted Countries:	**www.agilent.com/find/contactus**

(BP-3-1-13)

Printed in USA, July 9, 2013
5990-9968EN

Agilent Technologies