Quick Fact Sheet

Agilent E1827A 2-Axis Interferometer, Yaw

The Agilent E1827A 2-axis interferometer features pre-aligned optical sensors, excellent beam parallelism, low non-linearity error and low thermal drift. Machined datums aid in positioning the unit and reduce alignment effort.

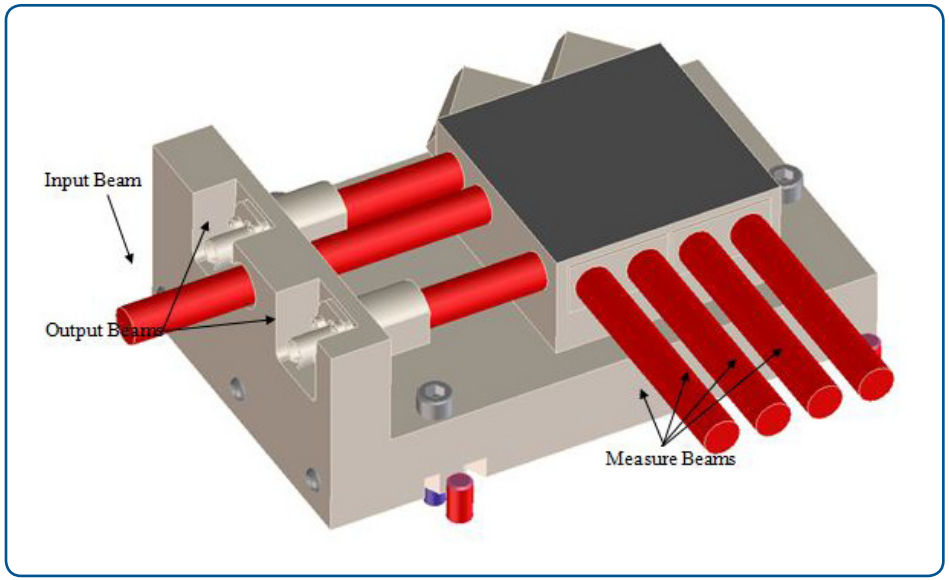

E1827A 2-axis Interferometer showing input and output beams

Key features

- Non-linearity error ± 1 nm
- Accommodates 9 mm and smaller input beam
- High (~1 kHz) mechanical resonance frequency
- λ/4 optical resolution
- 10 nm/°C or less thermal drift

Quick Fact Sheet

Agilent E1827A 2-Axis Interferometer, Yaw

Key specifications

Parameters	Specifications
Weight	2.35 kg (5.18 lb)
Dimensions (L x W x H)	139.3 x 84.0 x 50.0 mm
Materials	• Baseplate: Passivated 416 stainless steel • Optics: BK-7
Natural frequency	~ 1 kHz
Mounting interface	• Fasteners: M5 x 0.8 socket head captive screws • Surface profile: 0.02 mm • Surface finish: 0.4 µm
Beam diameter	9 mm maximum visible
Resolution	• Optical: λ/4 • Linear: 0.15 nm using 1024x resolution extension
Thermal drift due to glass path length imbalance	< 10 nm/°C
Non-linearity error	± 1 nm
Output efficiency	• Typical of all axes: 26% • Worst case of all axes: 19%
Measure point tolerance	• Mean: ± 0.15 mm • Deviation: ± 0.05 mm
Input beam cone angle	< 1 mrad
Beam parallelism	Axis #1 to Axis #2 < 25 µrad
Operating temperature	19 to 26 °C
Measurement mirror recommendation	• Reflectivity: > 92% • Flatness: λ/20

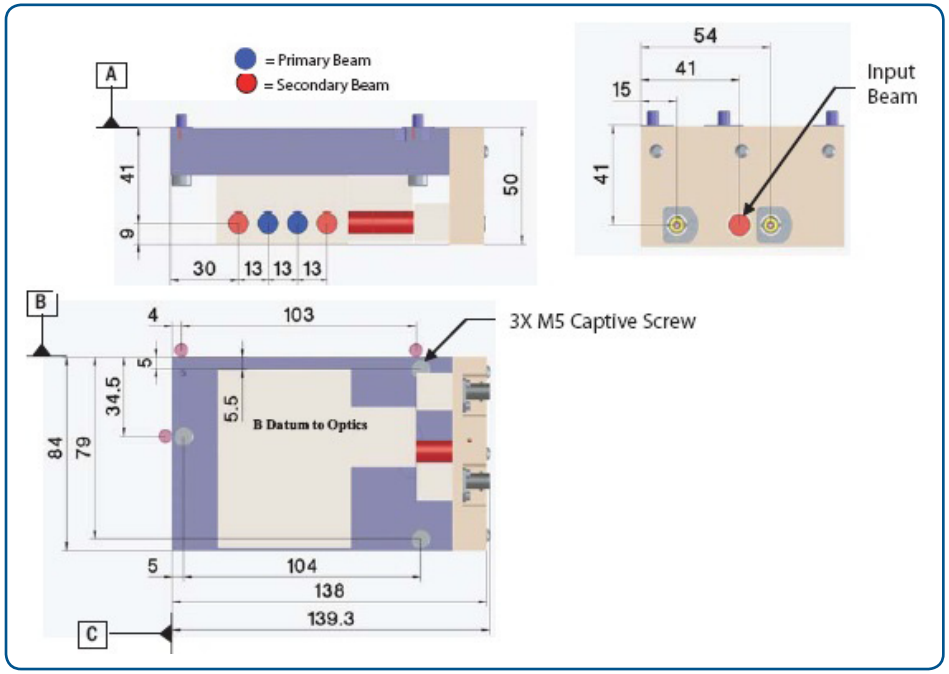

For more details on Agilent interferometry systems, components and ordering information please visit: **www.agilent.com/find/lasers**

Technical data and availability subject to change without notice.
© Agilent Technologies, Inc. 2012, Printed in USA, May 8, 2012
5991-0461EN

Agilent Technologies