Agilent 82357B USB/GPIB Interface

User's Guide

Agilent Technologies

Notices

© Agilent Technologies, Inc. 2006–2013

No part of this manual may be reproduced in any form or by any means (including electronic storage and retrieval or translation into a foreign language) without prior agreement and written consent from Agilent Technologies, Inc. as governed by United States and international copyright laws.

Manual Part Number

82357-90003

Edition

Seventh Edition, March 19, 2013

Printed in Malaysia

Agilent Technologies, Inc.
5301 Stevens Creek Blvd.
Santa Clara, CA 95052 USA

Trademark Acknowledgements

Microsoft, Windows, Visual Studio, and Windows Vista are trademarks or registered trademarks of Microsoft Corporation in the United States and/or other countries.

Warranty

The material contained in this document is provided "as is," and is subject to being changed, without notice, in future editions. Further, to the maximum extent permitted by applicable law, Agilent disclaims all warranties, either express or implied, with regard to this manual and any information contained herein, including but not limited to the implied warranties of merchantability and fitness for a particular purpose. Agilent shall not be liable for errors or for incidental or consequential damages in connection with the furnishing, use, or performance of this document or of any information contained herein. Should Agilent and the user have a separate written agreement with warranty terms covering the material in this document that conflict with these terms, the warranty terms in the separate agreement shall control.

Technology Licenses

The hardware and/or software described in this document are furnished under a license and may be used or copied only in accordance with the terms of such license.

Restricted Rights Legend

U.S. Government Restricted Rights. Software and technical data rights granted to the federal government include only those rights customarily provided to end user customers. Agilent provides this customary commercial license in Software and technical data pursuant to FAR 12.211 (Technical Data) and 12.212 (Computer Software) and, for the Department of Defense, DFARS 252.227-7015 (Technical Data - Commercial Items) and DFARS 227.7202-3 (Rights in Commercial Computer Software or Computer Software Documentation).

Safety Notices

CAUTION

A **CAUTION** notice denotes a hazard. It calls attention to an operating procedure, practice, or the like that, if not correctly performed or adhered to, could result in damage to the product or loss of important data. Do not proceed beyond a **CAUTION** notice until the indicated conditions are fully understood and met.

WARNING

A WARNING notice denotes a hazard. It calls attention to an operating procedure, practice, or the like that, if not correctly performed or adhered to, could result in personal injury or death. Do not proceed beyond a WARNING notice until the indicated conditions are fully understood and met.

U.S. Government Restricted Rights

The Software and Documentation have been developed entirely at private expense. They are delivered and licensed as “commercial computer software” as defined in DFARS 252.227- 7013 (Oct 1988), DFARS 252.211-7015 (May 1991) or DFARS 252.227-7014 (Jun 1995), as a “commercial item” as defined in FAR 2.101(a), or as “Restricted computer software” as defined in FAR 52.227-19 (Jun 1987) (or any equivalent agency regulation or contract clause), whichever is applicable. You have only those rights provided for such Software and Documentation by the applicable FAR or DFARS clause or the Agilent standard software agreement for the product involved.

General Warranty

The material contained in this document is provided “as is,” and is subject to being changed, without notice, in future editions. Further, to the maximum extent permitted by applicable law, Agilent disclaims all warranties, either express or implied with regard to this manual and any information contained herein, including but not limited to the implied warranties of merchantability and fitness for a particular purpose. Agilent shall not be liable for errors or for incidental or consequential damages in connection with the furnishing, use, or performance of this document or any information contained herein. Should Agilent and the user have a separate written agreement with warranty terms covering the material in this document that conflict with these terms, the warranty terms in the separate agreement will control. Duration and conditions of warranty for this product may be superseded when the product is integrated into (becomes a part of) other Agilent products. During the warranty period, Agilent will, at its option, either repair or replace products which prove to be defective. The warranty period begins on the date of delivery or on the date of installation if installed by Agilent.

Warranty Service

For warranty service or repair, this product must be returned to a service facility designated by Agilent. For products returned to Agilent for warranty service, the Buyer shall prepay shipping charges to Agilent and Agilent shall pay shipping charges to return the product to the Buyer. However, the Buyer shall pay all shipping charges, duties, and taxes for products returned to Agilent from another country.

Limitation of Warranty

The foregoing warranty shall not apply to defects resulting from improper or inadequate maintenance by the Buyer, Buyer-supplied products or interfacing, unauthorized modification or misuse, operation outside of the environmental specifications for the product, or improper site preparation or maintenance.

The design and implementation of any circuit on this product is the sole responsibility of the Buyer. Agilent does not warrant the Buyer's circuitry or malfunctions of Agilent products that result from the Buyer's circuitry. In addition, Agilent does not warrant any damage that occurs as a result of the Buyer's circuit or any defects that result from Buyer-supplied products.

To the extent allowed by local law, Agilent makes no other warranty, expressed or implied, whether written or oral with respect to this product and specifically disclaims any implied warranty or condition of merchantability, fitness for a particular purpose or satisfactory quality.

Exclusive Remedies

To the extent allowed by local law, the remedies provided herein are the Bu yer's sole and exclusive remedies. Agilent shall not be liable for any direct, indirect, special, incidental, or consequential damages (including lost profit or data), whether based on warranty, contract, tort, or any other legal theory.

Technology Licenses

The hardware and/or software described in this document are furnished under a license and may be used or copied only in accordance with the terms of such license.

Safety Summary

The following general safety precautions must be observed during all phases of operation of this instrument. Failure to comply with these precautions or with specific warnings elsewhere in this manual violates safety standards of design, manufacture, and intended use of the instrument. Agilent Technologies, Inc. assumes no liability for the customer's failure to comply with these requirements.

Safety Notices

WARNING

A WARNING notice denotes a hazard. It calls attention to an operating procedure, practice, or the like that, if not correctly performed or adhered to, could result in personal injury or loss of life. Do not proceed beyond a WARNING notice until the indicated conditions are fully understood and met.

CAUTION

A **CAUTION** notice denotes a hazard. It calls attention to an operating procedure, practice, or the like that, if not correctly performed or adhered to, could result in damage to the product or loss of important data. Do not proceed beyond a **CAUTION** notice until the indicated conditions are fully understood and met.

Safety Symbols

The following symbol on the instrument and in the documentation indicates precautions that must be taken to maintain safe operation of the instrument.

⚠	The Instruction Documentation Symbol. The product is marked with this symbol when it is necessary for the user to refer to the instructions in the supplied documentation.

Regulatory Markings

CE ISM 1-A	The CE mark shows that the product complies with all the relevant European Legal Directives.
ICES/NMB-001	ICES/NMB-001 indicates that this ISM device complies with Canadian ICES-001.
SA ® C US	The CSA mark is a registered trademark of the Canadian Standards Association. A CSA mark with the indicators "C" and "US" means that the product is certified for both the U.S. and Canadian markets, to the applicable American and Canadian standards.
N10149	The C-tick mark is a registered trademark of the Spectrum Management Agency of Australia. This signifies compliance with the Australian EMC Framework regulations under the terms of the Radio Communications Act of 1992.
	This product complies with the WEEE Directive (2002/96/EC) marking requirement. The affixed product label indicates that you must not discard this electrical/electronic product in domestic household waste.

General Safety Information

WARNING

- **DO NOT use the device if it appears damaged or defective.**
- **Observe all markings on the device before connecting any wiring to the device.**
- **DO NOT operate the device in the presence of flammable gases or fumes.**
- **DO NOT install substitute parts or perform any unauthorized modification to the device.**

CAUTION

- Use the device with the cables provided.
- Repair or service that is not covered in this manual should only be performed by qualified personnels.

Waste Electrical and Electronic Equipment (WEEE) Directive 2002/96/EC

This instrument complies with the WEEE Directive (2002/96/EC) marking requirement. This affixed product label indicates that you must not discard this electrical/electronic product in domestic household waste.

Product Category:

With reference to the equipment types in the WEEE directive Annex 1, this instrument is classified as a “Monitoring and Control Instrument” product.

The affixed product label is shown as below:

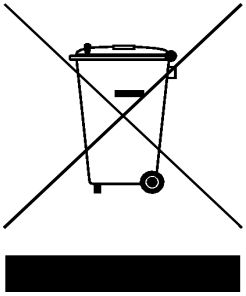

Do not dispose in domestic household waste

To return this unwanted instrument, contact your nearest Agilent office, or visit:

www.agilent.com/environment/product

for more information.

Environmental Conditions

This instrument is designed for indoor use only. The table below shows the general environmental requirements for the product.

Environmental Conditions	Requirements
Temperature	0 °C to 55 °C (Operating) –40 °C to +70 °C (Non-operating)
Humidity	Operating up to 90% at 40 °C (Non-condensing) Non-operating up to 90% at 65 °C (Non-condensing)

CAUTION

This product is designed for use in compliance with:

- IEC 61010-1:2001/EN 61010-1:2001
- USA: UL61010-1: 2004
- Canada: CSA C22.2 No. 61010-1:2004

General Maintenance

To remove the dirt or moisture in the enclosure:

- Wipe the case with a damp cloth and mild detergent.
- Do not use abrasives or solvents.
- Wipe the contacts in each terminal with a clean swab dipped in alcohol.

Declaration of Conformity (DoC)

The Declaration of Conformity (DoC) for this instrument is available on the Agilent Web site. You can search the DoC by its product model or description at the Web address below.

http://regulations.corporate.agilent.com/DoC/search.htm

NOTE If you are unable to search for the respective DoC, please contact your local Agilent representative.

Table of Contents

1 Installing the Agilent 82357B

Step 1: Checking Your Shipment 2

Step 2: Installing Agilent IO Libraries Suite 3

Step 3: Connecting the 82357B 5

82357B hardware description 5

Connecting the 82357B to your PC 6

Connecting the 82357B to a USB hub 7

Step 4: Connecting GPIB Instruments 9

Connecting a single GPIB instrument 9

Connecting multiple GPIB instruments 10

Step 5: Programming via the 82357B 11

Establishing instrument communication 11

Programming GPIB instruments 13

2 Using the Agilent 82357B

Initial 82357B Operating States 18

Introduction to 82357B operating modes 19

Single 82357B operation 20

Multiple 82357B operation 21

SRQ operation 22

Setting Configuration Parameters 23

Changing configuration parameters 23

Changing modes of operation 24

Setting timeout floor values 25

Setting 82357B high-performance operation 26

3 Troubleshooting the Agilent 82357B

Troubleshooting Flowchart 28

Observe the LED states 28

Hardware Checks 30

Check USB cables, USB interface, host PC 30

Check Device Manager 31

Software Installation Checks 32

Check suspend/resume operation 32

Verify Agilent IO Libraries Suite installation 32

Software Configuration Checks 35

Checking IO Control operation 35

Check USB scanner 36

Service and Support Information 37

Contacting Agilent 37

4 Product Specifications

Technical Specifications 40

Supplementary Information 43

1
Installing the Agilent 82357B

This chapter shows a suggested five-step process to install the 82357B and the Agilent IO Libraries Suite, to connect the 82357B to your PC and to program GPIB instruments via the 82357B.

Step 1: Checking Your Shipment

Your 82357B USB/GPIB Interface shipment should include the items shown in Figure 1-1. If any item is missing or damaged, keep the shipping materials and contact Agilent Technologies. See "Contacting Agilent" on page 37 later in this guide for addresses and telephone numbers.

As you check the shipment items, verify that the 82357B serial number at the bottom of the 82357B matches the serial number shown on the serial number label of the 82357B Kit Box and on the 82357B Certificate of Calibration. If the Serial Numbers do not match, contact Agilent. If all Serial Numbers match, you may want to record the Serial Number for future reference.

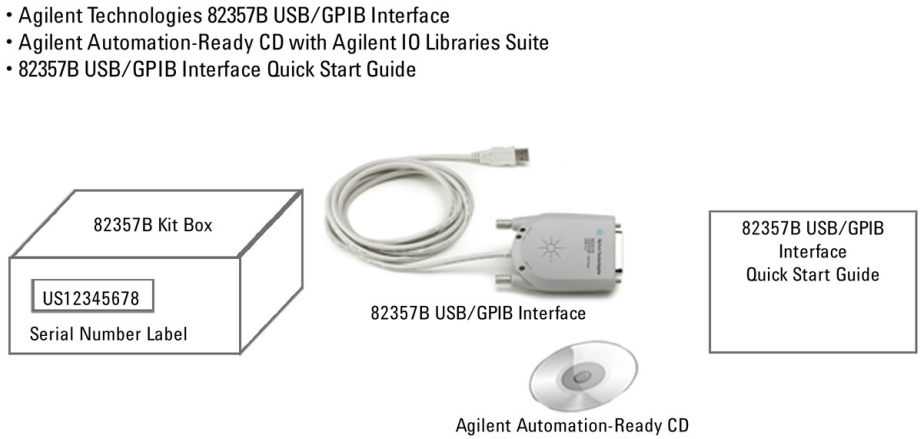

Figure 1-1 Contents of Agilent 82357B USB/GPIB Interface

Step 2: Installing Agilent IO Libraries Suite

NOTE You must have Administrator privileges to install Agilent IO Libraries Suite Connection Expert.

This section describes how to install the Agilent IO Libraries Suite on your PC. The Agilent IO Libraries Suite is a collection of libraries and utilities that gives you the ability to use your instruments from instrument control software.

You should install the Agilent IO Libraries Suite as your first step before installing the hardware because it installs the necessary software and drivers to control your instruments.

If possible, always use the most recent version of the Agilent IO Libraries Suite. This version supports the newest interfaces and operating systems, and has the most advanced features.

1 Verify that your PC meets the minimum system requirements. Refer to the IO Libraries Web page at www.agilent.com/find/iosuite or the IO Libraries Suite Readme.

2 Close all applications on your computer. Insert the Agilent Automation-Ready CD in your CD-ROM drive or download and install the IO Libraries software from www.agilent.com/find/iosuite.

3 Follow the instructions as prompted during the installation. You can select either a Typical or a Custom installation:

- **Typical** - In most cases, you can select the Typical installation which installs the IO Libraries Suite using the recommended settings.

- **Custom** - Select the Custom installation to:
  - **a** Install the IO Libraries Suite in another directory (for 32-bit operating systems only).
  - **b** Save disk space by not installing interface manuals.
  - **c** Use Agilent 32- bit VISA with another vendor's VISA on the same PC in side- by- side mode. Details on side- by- side mode are available at www.agilent.com/find/side-by-side-install or in the IO Libraries Suite help.

4 After the IO Libraries suite is successfully installed, you will see the IO icon on the Windows® taskbar notification area.

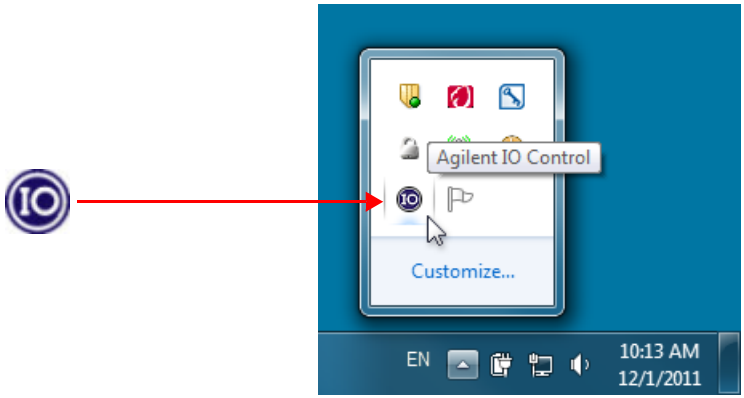

Figure 1-2 IO icon on the Windows taskbar notification area

Step 3: Connecting the 82357B

After the Agilent IO Libraries Suite software has been installed, you can connect the 82357B to any USB port on your PC or you can connect the 82357B via standard USB hubs.

NOTE If the Agilent IO Libraries Suite software have not been installed on your PC, **STOP**. Install the libraries (see Step 2: Installing Agilent IO Libraries Suite).

82357B hardware description

The Agilent 82357B provides a direct interface connection from your PC USB port to GPIB instruments. The 82357B includes an attached USB cable that is USB 2.0 compliant. This cable is shielded and the connector is specified for up to 1,500 insertions. An 82357B can be directly connected to a single GPIB instrument or up to 14 GPIB instruments via GPIB cables. Up to four 82357B converters may be connected to your PC via standard USB hubs.

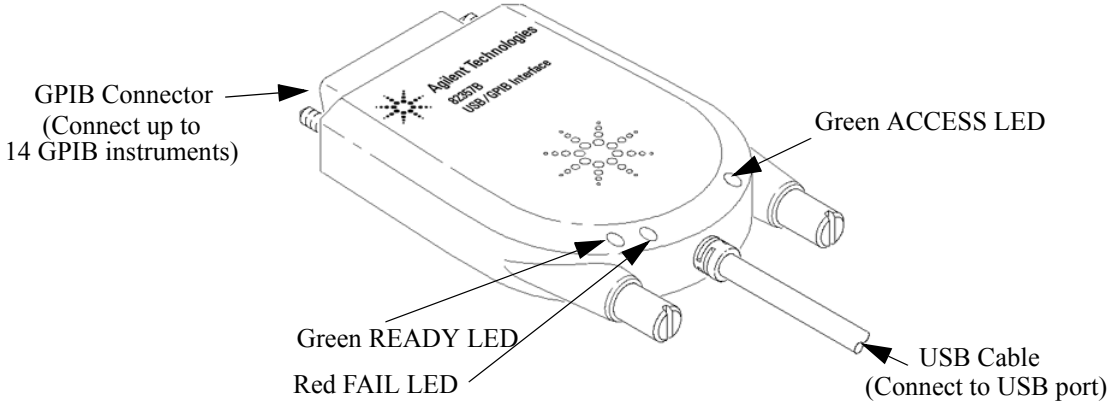

Figure 1-3 82357B Hardware Features

Connecting the 82357B to your PC

This section shows steps to connect the 82357B to a USB port on your PC or to your PC via a USB Hub.

1 **Connect to a USB Port.** Make sure the PC is ON and plug the 82357B USB cable into any available USB port on your PC. Do not connect the 82357B to GPIB instruments at this time.

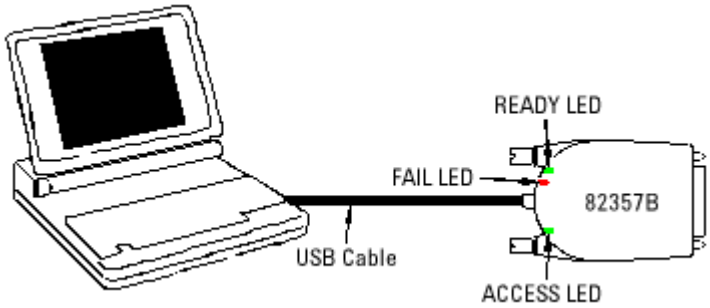

Figure 1-4 Connecting the 82357B to Your PC

2 **Observe the LEDs.** Observe the LEDs on the 82357B for at least 10 seconds. See Chapter 2, “Using the Agilent 82357B” for a description of the normal LED sequence during an initial installation of the 82357B.

   a Initially, only the red FAIL LED should be ON. After a few seconds, all three LEDs should be ON. When all three LEDs are ON, this shows that the 82357B has been successfully installed.

   b If all three LEDs are not ON after 10 seconds and all Windows Plug-and-Play Manager activity has ceased, **STOP**. See Chapter 3, “Troubleshooting the Agilent 82357B” for diagnostics information.

Connecting the 82357B to a USB hub

This section shows steps to connect the 82357B to a USB port on your PC via a standard USB hub.

NOTE Any USB hub used with the 82357B MUST be self-powered (must not be bus-powered or powered from the USB bus). Also, be sure to check the applicable USB hub documentation for hub operating parameters, such as power requirements and maximum length of USB cables.

1. Plug the power adapter into the hub and into an electrical outlet. Make sure the hub is operating in self-powered mode. Figure 1-5 shows a 4-port self-powered USB hub with two 82357B USB/GPIB Interfaces connected.
2. Make sure your PC is ON. Connect the USB cable of the USB hub to any available USB port on your PC.
3. Plug at least one 82357B USB/GPIB Interface into the port of the USB hub. It is not necessary to connect GPIB instruments to any 82357B at this time.

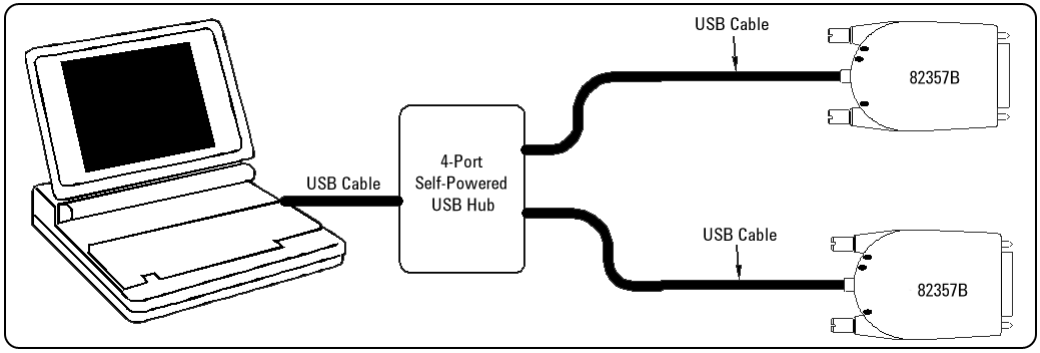

Figure 1-5 Connecting the 82357B to a USB Hub

4 Observe the LEDs on the 82357B for at least 10 seconds. See Chapter 2, “Using the Agilent 82357B” for a description of the normal LED sequence during an initial installation of the 82357B.

   a Initially, only the red FAIL LED should be ON. After a few seconds, all three LEDs should be ON. When all three LEDs are ON, this shows that the 82357B has been successfully installed.

   b If all three LEDs are not ON after 10 seconds and all Windows Plug-and-Play Manager activity has ceased, **STOP**. See Chapter 3, “Troubleshooting the Agilent 82357B” for diagnostics information.

NOTE For Windows Vista®, Windows 7, and Windows 8, there will be no Windows Plug and Play Manager Sequence because once 82357B is initially plugged into a USB port it will automatically install the driver.

Step 4: Connecting GPIB Instruments

After the 82357B has been installed, the next step is to connect GPIB instruments to the 82357B. This step includes:

- Connecting a Single GPIB instrument OR ...
- Connecting Multiple GPIB Instruments

CAUTION To avoid damage to the connectors, only finger-tighten the connectors.

Connecting a single GPIB instrument

Figure 1-6 shows connection from a single GPIB instrument to the GPIB port on an 82357B. When you have made the connection for your system, go to Step 5: Programming via the 82357B. You may want to record the primary GPIB address of the attached instrument for future programming use.

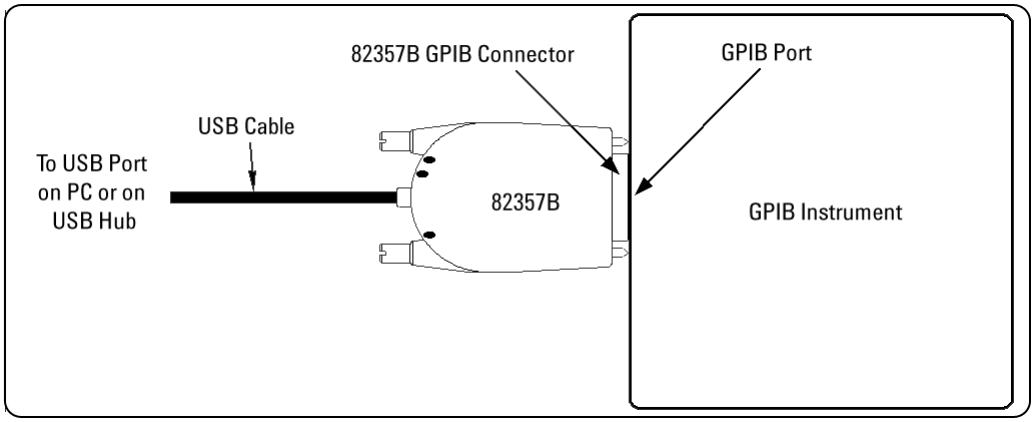

Figure 1-6 Connection from Single GPIB Instrument to the GPIB Port

Connecting multiple GPIB instruments

Figure 1-7 shows a typical way to connect three GPIB instruments to an 82357B. When you have made the connections for your system, go to Step 5: Programming via the 82357B. You may want to record the primary GPIB address of each attached instrument for future programming use.

NOTE Although Figure 1-7 shows the connection from 82357B to GPIB Instrument 1, the connection can be to any GPIB instrument in the system. Be sure to first connect the GPIB cable to the GPIB instrument and then "piggy-back" the 82357B GPIB connector to the GPIB cable.

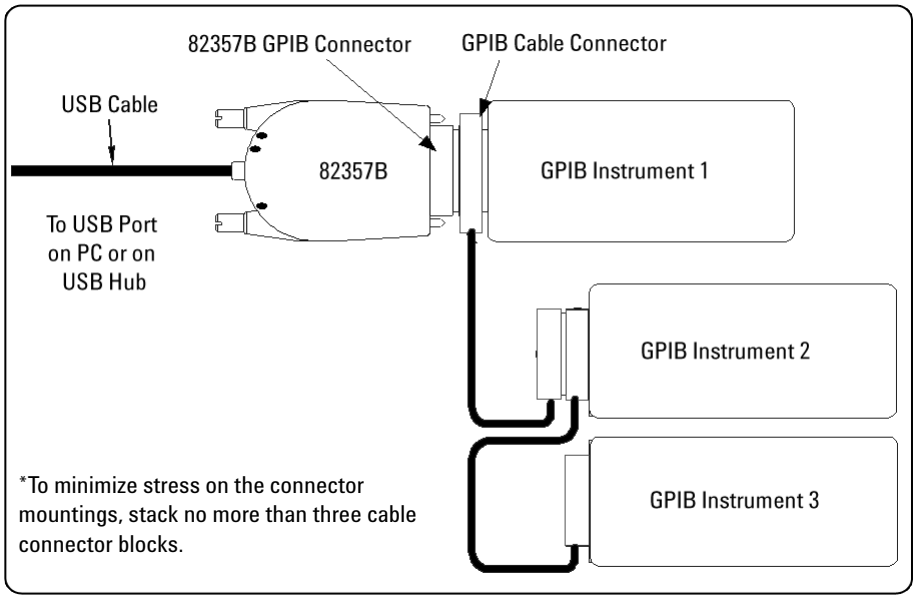

Figure 1-7 Typical Way of Connecting Three GPIB instruments to an 82357B

Step 5: Programming via the 82357B

After you have connected your GPIB instrument(s) to the 82357B, the next step is to establish communication between your PC and the instruments using *Interactive IO*. After communication has been established, you can begin programming the instruments using VISA, VISA COM, or SICL.

Establishing instrument communication

When the Agilent IO Libraries Suite is installed on your PC, an IO utility called *Interactive IO* is also installed. You can use Interactive IO to verify communication between your PC and the connected GPIB instrument(s). This section shows you how to use Interactive IO to verify instrument communication.

NOTE Once your GPIB interface has been configured in Connection Expert, if you can see the attached GPIB instrument(s) in the Connection Expert explorer and see their IDN string information in the detail pane then communication has been verified. Interactive IO allows you to manually verify communication and send specific commands to your instruments.

1. Click the IO icon on the Windows taskbar notification area.
2. Right-click the instrument and click **Send Commands To This Instrument** to display the Interactive IO window. For information on Interactive IO, click **Help**.
3. ***IDN?** is the default command. Click **Send & Read** to send the identification query to the instrument and display its reply in the Interactive IO window.

4 To send other commands, click **Commands>** to select from a list of common commands, or type a command into the **Command:** field. If you experience timeout errors for some commands, click **Options** to change the timeout value.

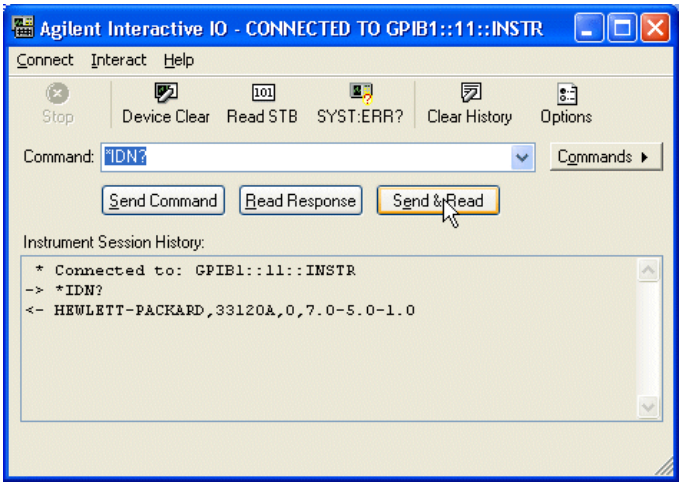

Figure 1-8 Agilent Interactive IO

5 When communication has been established to each GPIB instrument, you can begin to program the instruments using VISA, VISA COM, or SICL. See the next section, Programming GPIB instruments.

Programming GPIB instruments

This section provides an introduction to programming GPIB instruments via the 82357B USB/GPIB interface using the Agilent VISA, VISA COM, and SICL IO Libraries. You can program in various languages/applications, including Visual Basic, Visual C++, Agilent VEE, and National Instruments LabVIEW.

See the applicable user's guide(s), such as the *Visual Basic User's Guide*, for programming guidelines. You can also find additional programming examples using various IO Libraries and instrument drivers in the instrument user's guide. After the 82357B is successfully installed, the interface acts as a transparent interface for programming GPIB instruments.

For information on programming using Agilent VISA, see the *Agilent VISA User's Guide*. For information on VISA COM and for function references for VISA, VISA COM, and SICL, see the *IO Libraries Suite Online Help*.

Accessing VISA and SICL manuals

You can access .pdf copies of the *Agilent VISA User's Guide* and the *Agilent SICL User's Guide for Windows* from the IO icon on the Windows taskbar. Adobe Reader is required to view these manuals.

To access the *Agilent VISA User's Guide*, click the IO icon then click **Documentation > VISA Users Guide**. To access the *Agilent SICL User's Guide for Windows*, click the IO icon then click **Documentation > SICL Users Guide**. To access VISA COM information, and function references for VISA, VISA COM, and SICL, click the IO icon, then click **Help Topics.**

Introduction to IO interface configuration

An *IO interface* consists of a hardware interface and a software interface. The *Connection Expert* utility is used to associate a unique software interface ID with a hardware interface.

The Agilent IO Libraries Suite uses an *Interface ID* or *Logical Unit (LU) Number* to identify an interface. This information is passed in the parameter string of the viOpen function call in a VISA program or in the iopen function call in an SICL program.

The *Connection Expert* assigns an Interface ID and Logical Unit (LU) Number to the interface hardware, as well as other necessary configurations. Typically, the LU Number is automatically assigned and you can ignore its setting. The LU Number is used internally as a unique identifier. When the IO interface is configured, you can use Agilent VISA, VISA COM, or SICL to program assigned instruments.

Example: IO interface configuration

For example, the GPIB interface system in the Figure 1-9 consists of a Windows PC, an 82357B USB/GPIB interface, and three GPIB instruments with GPIB primary addresses of 3, 4, and 5, respectively. The instruments are connected via GPIB cables.

For this system, the *Connection Expert* utility has assigned a VISA name of “GPIB1” and a SICL name of “gpib1”. With these names assigned to the interfaces, the VISA/SICL addressing is as shown in Figure 1-9.

Since unique names have been assigned by the *Connection Expert*, you can use the VISA viOpen command or the SICL iopen command to open the IO paths to the GPIB instruments as shown in the figure.

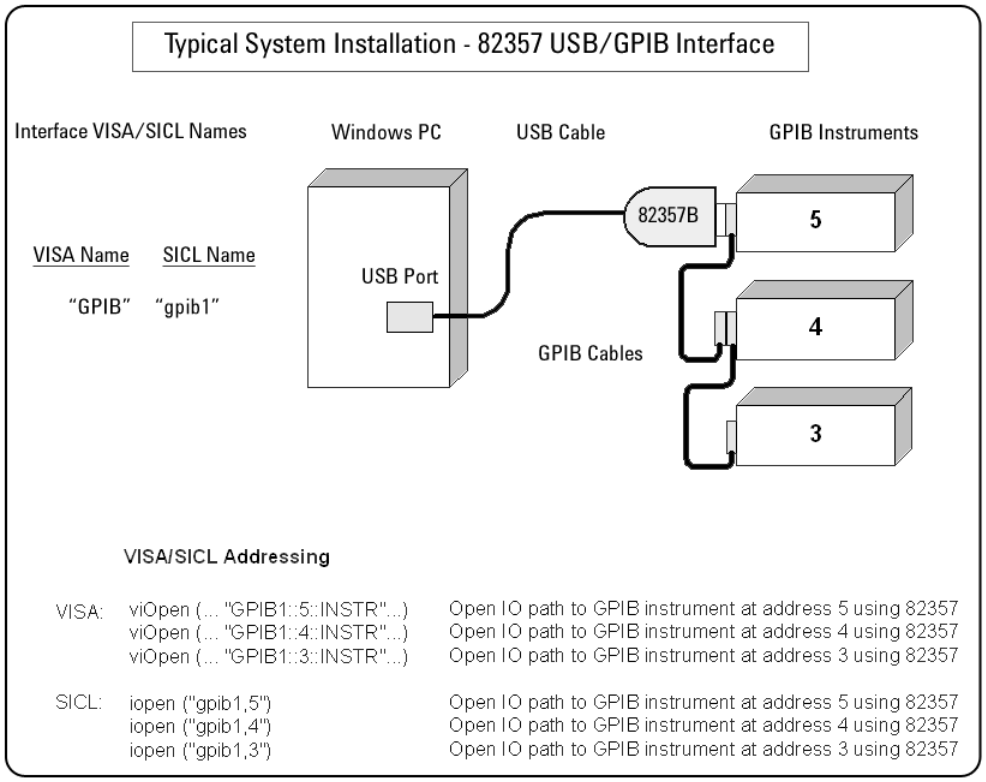

Figure 1-9 Typical System Installation - 82357B USB/GPIB Interface

THIS PAGE HAS BEEN INTENTIONALLY LEFT BLANK.

2
Using the Agilent 82357B

This chapter describes normal operating states and modes for the 82357B and provides the guidelines to use the 82357B, including:

- Initial 82357B operating states
- Introduction to 82357B operating modes
- Single 82357B operation
- Multiple 82357B operation
- SRQ operation

Initial 82357B Operating States

Figure 2-1 shows the sequence of initial operating states when the 82357B is first connected to a USB port on a PC or on a USB hub.

	State	Description	LED States READY (Green)	FAIL (Red)	ACCESS (Green)
1	82357B Connected, No Power	82357B is connected to a USB port on the PC or on a USB hub, but no power is applied to the 82357B.	○	○	○
2	82357B Connected, Power Applied	Power is applied to the 82357B from the USB port, but startup firmware not yet downloaded.	○	●	○
3	82357B Installed but not Configured	Host computer has downloaded startup firmware to the 82357B. The 82357B has been installed but not yet configured	●	●	●
4	Normal Operation, Idle State	82357B has been configured for operation with the Agilent IO Libraries.	●	○	○
5	Normal Operation, GPIB Transfers	The ACCESS LED is ON for any GPIB transfers.	●	○	○

○ LED OFF ● LED ON ○ Intermittent

Figure 2-1 Sequence of Initial Operating States

Introduction to 82357B operating modes

The 82357B has two modes of operation. When only one 82357B is connected to a USB port within a system, we define the feature as the Single Mode Features. When up to four 82357Bs are connected at the same time to USB ports within a system, we define the feature as the Multiple Mode Features.

NOTE All SICL/VISA applications are notified when their 82357B has been removed from the system by returning **VI_ERR_NOINFC** (for VISA) or **I_ERR_NCIC** (for SICL).

Single Mode Features

For single mode operation, the operating parameters (VISA Interface ID, SICL Interface ID, Logical Unit Number, and GPIB Address) are set when the 82357B is first installed.

If this 82357B is unplugged and replugged, or if the 82357B is replaced with a different 82357B, the previous configuration parameters are automatically assigned to the newly attached 82357B. Thus, you can exchange 82357Bs at any time without reconfiguring the interface. This allows exchanging 82357Bs among users, as long as only one 82357B is attached at any one time.

Multiple Mode Features

In contrast, when up to four 82357Bs are connected to the system at the same time, each 82357B must have its own specific set of operating parameters and each 82357B serial number is “bound” to its operating parameters. In multiple mode operation, if you add a new 82357B or if you unplug an 82357B and plug in a new 82357B in its place, the newly installed 82357B, will be assigned a new (unique) set of operating parameters.

Single 82357B operation

When an 82357B is first installed, a default VISA Interface ID, SICL Interface ID, Logical Unit (LU) number and GPIB Address are automatically assigned to the serial number associated with this specific 82357B.

For example, assume an 82357B with serial number MY12345678. When this 82357B is first installed, typical values as shown are automatically assigned to this serial number:

- VISA Interface ID: GPIB0
- SICL Interface ID: gpib0
- Logical Unit: 7
- GPIB Address: 21

NOTE You can change the parameter values of the 82357B as required. See "Changing configuration parameters" on page 23 for details.

The first time an 82357B is attached to a system (assuming the Agilent IO Libraries Suite and 82357B driver are installed), the software recognizes that an 82357B is attached. If the *Connection Expert* is not running, the software displays an **Agilent 82357B USB/GPIB Interface Detected** dialog box that allows you to accept the current settings. If the *Connection Expert* is running, it automatically refreshes, displaying the 82357B as a USB/GPIB interface in its tree view. You can then change the properties of the interface via the *Connection Expert*.

The VISA and SICL Interface IDs, Logical Unit Number, and GPIB Address may be viewed at any time in the property pane of the *Connection Expert*. (To view this window, click the IO icon, then select **Agilent Connection Expert**.)

If you disconnect this 82357B and plug in another 82357B (with a different serial number), or if you re-plug the same 82357B, the new 82357B will assume the same VISA Interface ID, SICL Interface ID, LU number, and GPIB Address as the previous 82357B.

Multiple 82357B operation

When two or more 82357Bs are attached to a system at the same time, we define the mode as the multiple mode of operation. In multiple mode of operation, each 82357B is "bound" to its related IO Configuration for that Serial Number. This is a different mode of operation than the single mode of operation in that the configuration is not reused if you replace an 82357B with another 82357B.

As with single mode operation, the first time an 82357B is attached to a system (assuming the Agilent IO Libraries Suite and 82357B driver are installed), the software recognizes that an 82357B is attached. If the *Connection Expert* is not running, the software displays an **Agilent 82357B USB/GPIB Interface Detected** dialog box that allows you to accept the current settings. If the *Connection Expert* is running, it automatically refreshes, displaying the 82357B as a USB/GPIB interface in its tree view; you can then change the properties of the interface in the *Connection Expert*.

The VISA and SICL Interface IDs, Logical Unit Number, and GPIB Address may be viewed at any time in the property pane of the *Connection Expert*. (To view this window, click the IO icon, then select **Agilent Connection Expert**.)

If you plug in another 82357B (with a different Serial Number), the new 82357B will automatically be assigned a unique VISA Interface ID, SICL Interface ID, LU, and GPIB Address.

NOTE

- You can change the parameter values of the 82357B as required. See "Changing configuration parameters" on page 23 for details.
- You can also convert from multiple mode operation to single mode operation. See "Changing modes of operation" on page 24 for details.

SRQ operation

If your VISA/SICL application uses SRQ callbacks (**viEventHandler()** in VISA or **ionsrq()** in SICL) and your callback does not service the SRQ in a timely manner, your SRQ callback function may be triggered multiple times.

To avoid this possible situation, design your SRQ callback functions to be called only when an SRQ is no longer asserted on the GPIB bus.

Setting Configuration Parameters

This section gives guidelines to change or set various configuration parameters for the 82357B, including:

- Changing Configuration Parameters
- Changing Modes of Operation
- Setting Timeout Floor Value
- Setting High-Performance Operation

Changing configuration parameters

To change the VISA or SICL Interface ID, the LU or GPIB Address, or if you want to check the values of these configuration parameters, highlight the USB/GPIB interface in the explorer view (tree view) of the *Connection Expert* window. Click on the **Change Properties...** button in the property pane to display the **Agilent 82357 Interface** dialog box. Choose the settings you want, then click **OK**. Clicking **Cancel** will cause the configuration set in the preceding dialog box to be used.

NOTE Although you can change the Logical Unit (LU) Number and GPIB Address values for an 82357B, this is generally not necessary and may cause running applications to fail or stop running.

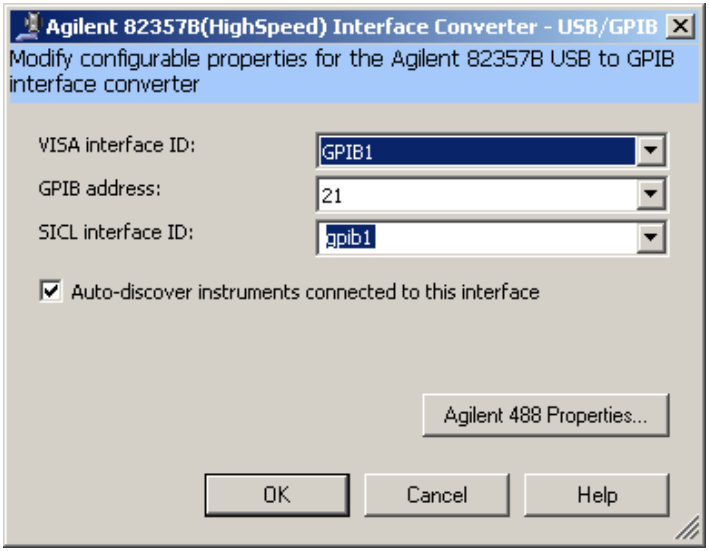

Figure 2-2 Agilent 82357B (High Speed) Interface - USB/GPIB

Changing modes of operation

If your system has multiple 82357Bs configured (multiple mode operation), the only way to change from multiple mode of operation to single mode operation is to perform the following:

1 Unplug all 82357Bs from the system.

2 Run *Connection Expert* (click the IO icon, then click **Agilent Connection Expert**).

3 Delete all 82357B configurations by selecting each USB/GPIB icon in the explorer view, then clicking **Delete** (or delete all except one configuration).

4 Re-attach and re-configure a single 82357B.

Setting timeout floor values

The 82357B has a default timeout “floor” value that is an internal requirement to ensure reliable USB communication. The 82357B will not allow timeouts less than the floor value. (By default, VISA/SICL timeouts are set to infinite time).

To programmatically determine the timeout floor, you can set the timeout to a very small value, such as 1 ms, then query for the actual timeout floor value. VISA and SICL examples are as follows:

Example: Query Timeout Floor (VISA)

```
tval = 1;                // Try to set timeout to 1 msec
err = viSetAttribute(id, VI_ATTR_TMO_VALUE,
tval_in);
...
err = viGetAttribute(id, VI_ATTR_TMO_VALUE,
&tval_out);
...
printf("Set timeout to [%d], actual timeout that
resulted [%d]\n", tval_in, tval_out );
```

Example: Query Timeout Floor (SICL)

```
tval = 1;                 // Try to set timeout to 1
msec
err = itimeout(id, tval_in);
...
err = igettimeout(id, &tval_out);
...
printf("Set timeout to [%d], actual timeout that
resulted [%d]\n",tval_in, tval_out );
```

Setting 82357B high-performance operation

NOTE Changing the T1 delay as described in this section is an advanced feature and also requires attention to cable lengths and other system features.

Introduction

The GPIB transfer rate for 82357B writes using large (>1000 bytes) buffer size is affected by the Data Available (T1) delay time. (The transfer rates are not noticeably affected when the buffer size is <1000 bytes). The default delay time used by the 82357B is 800 ns.

The maximum transfer rate for T1 = 357 ns is about 1.15 MB/s as compared to about 714 KB/s for the 82357B default value of 800 ns. Changing the T1 delay affects only the write performance of the 82357B.

Setting T1 Value With VISA

To set the T1 value with VISA, use the **VI_AGATTR_GPIB_T1_DELAY** attribute. The **VI_AGATTR_GPIB_T1_DELAY** value is the value of the T1 delay in nanoseconds, and should be no less than **VI_AG_GPIB_T1DELAY_MIN** and no greater than **VI_AG_GPIB_T1DELAY_MAX**. This value is defined in Agilent's 'visa.h' header file. To use this value, you must '**#define AGVISA_ATTRIBUTES**' before the **'#include 'visa.h''** in your C or C++ source file.

The 82357B supports T1 delays from 357 ns to <*max_value*> in steps of 40 ns. You can find out the actual value by calling **viGetAttribute()**.

Attribute	Access Privilege	Data Type	Range (ns)	Used By
VI_AGATTR_GPIB_T1_DELAY	RW Global	ViInt32	**VI_AG_GPIB_T1DELAY_MIN** to **VI_AG_GPIB_T1DELAY_MAX**	GPIB INTFC resources

Setting T1 Value With SICL

To set T1 value with SICL, use the **igpibsett1delay()** command and modify the GPIB environment.

3
Troubleshooting the Agilent 82357B

This chapter provides troubleshooting guidelines of the 82357B including hardware and software checks and also the service and support information for the 82357B.

Troubleshooting Flowchart

Figure 3-1 shows a suggested sequence of steps to diagnose and troubleshoot 82357B problems, based on the LED states.

You can use the LED states to help diagnose and troubleshoot the 82357B whenever the LED states do not match expected normal states. See Chapter 2, “Using the Agilent 82357B” for the normal LED sequence when the 82357B is initially connected to a USB port.

Observe the LED states

To begin troubleshooting, observe the LED states for at least 10 seconds after the 82357B is connected to a USB port and all Windows Plug-and-Play Manager activity has ceased. Do the following:

- If all LEDs are OFF, start with Hardware Checks
- If the red FAIL LED is ON, start with Software Installation Checks
- If all LEDs are ON, start with Software Configuration Checks

After taking the steps in the check sequence, use the boxes in Figure 3-1 to determine the next step. For example, if doing a hardware check results in only the red FAIL LED being ON, proceed with Software Installation Checks, and so on.

NOTE You do not have to do all the steps or do the steps in the order shown. If any action results in a change in LED states, go to the applicable check sequence to continue troubleshooting.

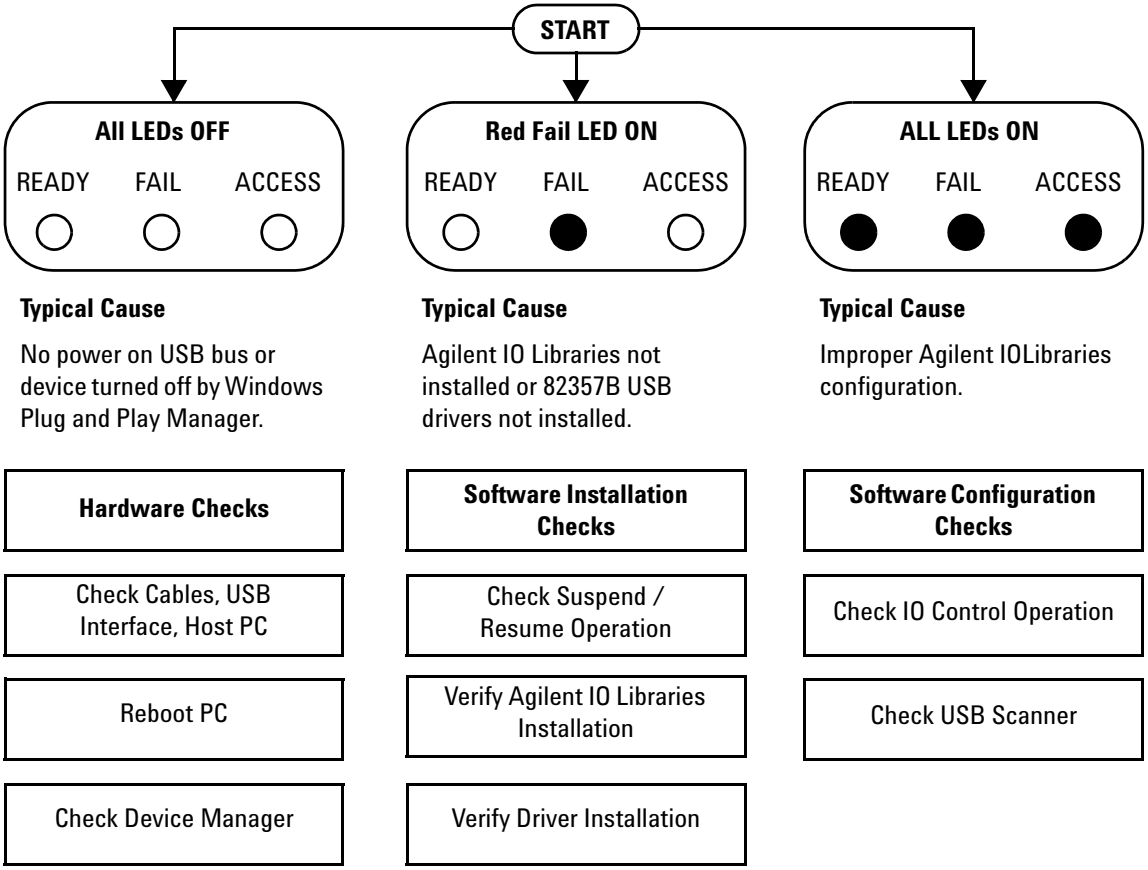

Figure 3-1 Troubleshooting Flowchart

Hardware Checks

If all LEDs are still off for 10 or more seconds after plugging the 82357B USB cable into a USB port, and all Windows Plug-and-Play Manager activity and the *Connection Expert* refreshes have ceased, start your troubleshooting sequence by performing hardware checks. If any action taken results in a change in the LED status, go to Software Installation Checks or Software Configuration Checks.

Check USB cables, USB interface, host PC

Begin the hardware check by checking connections between the 82357B and PC (plus USB hubs, if used).

1 **Check USB cable connections.** Check the 82357B USB cable for a good connection to the USB port on the PC or on the USB hub. If you are using a USB hub, verify that the hub is connected to the PC.

2 **Unplug/replug the 82357B USB cable.** If this does not change the LED status, try plugging the 82357B into another USB port.

3 **Check PC USB Port.** Verify that the PC USB port is functional and powered (you can check using another USB device).

4 **Check PC state.** Verify that host computer is not in a suspended power management state.

5 **Check USB hub.** Try disconnecting the 82357B from the hub and connecting it directly to a USB port on the PC. Some USB hubs are vulnerable to static shock.

6 **Check USB cables for damage.** Check the USB cable for cuts/crushes. Since the end connectors are somewhat fragile, check for bent/misaligned/crushed connectors.

Reboot PC

If these steps do not change the LED status, reboot the PC.

Check Device Manager

You can use the Windows Device Manager to reinstall the 82357B, as required.

Go to **Device Manager** by selecting **Start > Control Panel > System > Hardware > Device Manager**.

For Windows 8, right-click the bottom-left corner of the Desktop and select **Device Manager**.

From the **Device Manager**, select **82357** and then **Properties**. Tab to **Driver** and click **Reinstall Driver**. This will allow the Windows Plug-and-Play Manager to begin searching for a driver for the 82357B. Since the Device Manager may have disabled the 82357B USB device, click **Enable** to restart the 82357B.

NOTE If you are using a USB scanner, scanner conflicts are possible. See Check USB scanner in the "Software Installation Checks" on page 32.

Software Installation Checks

When only the red FAIL LED is still on after 10 seconds, the 82357B has been detected by the host computer.

Check suspend/resume operation

Some Windows operating systems support Power Management which can suspend the PC while the 82357B is in operation. After a Suspend/Resume cycle, the 82357B may not properly resume operation. In this case, you may need to unplug/replug the USB cable to restore 82357B operation. If this does not correct the problem, go to Verify Agilent IO Libraries Suite installation.

NOTE If your 82357B applications must not be preempted by a PC Suspend event, we recommend you to disable Power Management on your PC by using the **Control Panel > Power Options** dialog.

Verify Agilent IO Libraries Suite installation

When only the red LED is on after 10 seconds and all Windows Plug and Play Manager activity has ceased, start your troubleshooting sequence by verifying IO Libraries installation. If any action taken results in a change in the LED status, go to Software Configuration Checks or Hardware Checks.

1 **Check Agilent IO Libraries Version.** If a version of the IO Libraries Suite has been installed, the IO icon is normally displayed on the Windows taskbar notification area.

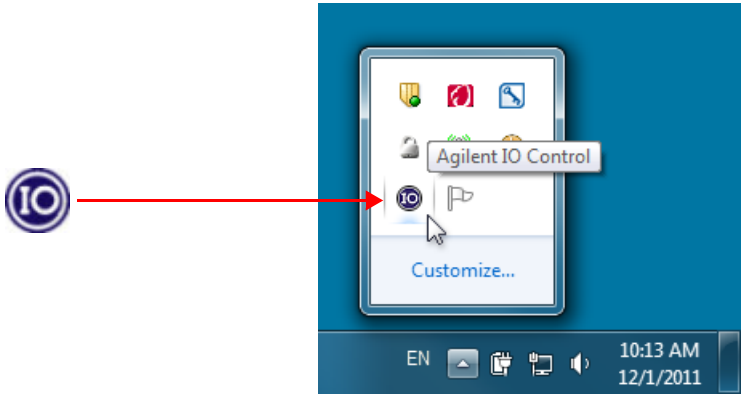

Figure 3-2 IO icon on the Windows taskbar notification area

a If the IO icon is displayed, click the icon and select **About Agilent IO Control** to display the version. The version must be 15.0 or greater.

b If the IO icon is not displayed, a version of the IO Libraries Suite may still be installed. To verify this, check for Agilent Connection Expert in the Start menu, or the Start Screen (Windows 8).

c If found, launch the Agilent Connection Expert and select **View > Agilent IO Control** to place a check mark next to the Agilent IO Control selection.

d If Agilent Connection Expert is not found in the Start menu or the Start Screen (Windows 8), no version of Agilent IO Libraries is installed. In this case, or if the installed version is not 15.0 or greater, you must install the newer version (see Step 2).

2 **Install Agilent IO Libraries (as required).** If Version 15.0 or greater of the Agilent IO Libraries Suite is not installed on your PC, perform this step.

   a Remove the 82357B USB cable from the USB port.

   b Insert the *Automation-Ready CD* into your CD-ROM drive and follow the instructions in Chapter 1, "Installing the Agilent 82357B" to install the libraries. If you do not have the *Automation-Ready CD*, you can download the Agilent IO Libraries Suite from www.agilent.com/find/iolib

   c Re-attach the 82357B USB cable to the USB port and observe the LEDs for at least 10 seconds.

   If all three LEDs remain ON, go to Software Configuration Checks.

Software Configuration Checks

If all three LEDs remain on for more than 10 seconds after the 82357B is connected to a USB port, the 82357B has been installed.

Start your troubleshooting sequence by checking IO Control operation. If any action taken results in a change in the LED status, go to *Software Installation Checks* or *Hardware Checks*, where applicable.

Checking IO Control operation

When the Agilent IO Libraries Suite is installed, an IO Control is created. When the IO Control is active, it is displayed as an IO icon on the Windows taskbar. By default, the IO Control is always active after the libraries are installed and the IO icon is displayed. However, there may be times when the IO Control can get deactivated. When this happens, SICL/VISA applications that are running with the 82357B will malfunction. Any of the following symptoms may indicate the IO Control is not active:

- *Connection Expert* is not running, and the **Agilent 82357B USB/GPIB Interface Detected** dialog box does not appear when an 82357B is first connected to a USB port.
- *Connection Expert* is running, but does not automatically refresh when an 82357B is first connected to a USB port.
- SICL/VISA applications using the 82357B are unable to open sessions.
- Windows Task Manager shows that iproc82357.exe is not running or is non-responsive.

If any of these symptoms occur:

1 **Unplug/Replug the 82357B.** If unplugging then replugging the 82357B causes the **Agilent 82357B USB/GPIB Interface Detected** dialog box to appear or the *Connection Expert* window to refresh, the problem is solved. If not, go to Step 2.

2 **Shut down and restart IO Control.** Take these steps to shut down and then restart the IO Control. Taking these actions should initialize all attached 82357Bs and display only the green Ready LED.

   a If the IO icon is displayed, click the icon and then click **Exit**. A dialog box explaining the consequences of removing the IO Control appears. Click **OK** to shut down the IO Control.

   b If the IO icon is not displayed, either the icon display has been turned off or the IO Control (and associated iproc82357.exe and iprocsvr.exe) is not active. In this case, launch the Agilent Connection Expert and select **View > Agilent IO Control** to place a check mark next to the Agilent IO Control selection to restart the IO Control and display the IO icon.

NOTE Rebooting your PC should ALWAYS restart the IO Control, and re-execute iprocsvr.exe and iproc82357.exe.

Check USB scanner

In general, USB scanners do not cause problems with the 82357B. However, if you do have problems with 82357B operation and have a scanner installed on your system that uses a USB port, unplug the scanner and then plug the 82357B into the port.

If the 82357B is configured without your scanner attached to your system, the scanner will be locking the 82357B from using the USB bus. In this case, contact your scanner manufacturer to request for software or firmware updates for the scanner.

Service and Support Information

There are no user-serviceable parts for the Agilent 82357B USB/GPIB interface. If you suspect a hardware failure for the 82357B, contact Agilent for instructions to return the unit. See the following Contacting Agilent section for telephone numbers/Web site address.

Contacting Agilent

You can reach Agilent Technologies at this telephone number for the Americas:

Americas Call Center: 1-800-829-4444

For other countries, contact your country's Agilent support organization. A list of contact information for other countries is available on the Agilent Web site:

www.agilent.com/find/assist

THIS PAGE HAS BEEN INTENTIONALLY LEFT BLANK.

4
Product Specifications

This chapter lists the 82357B technical specifications and supplementary information.

Technical Specifications

GENERAL REQUIREMENTS	
Minimum system requirements	Windows XP Service Pack 3 • 600 MHz or higher required (800 MHz recommended) • 256 MB RAM (1 GB or greater is recommended) • Hard Disk Space - 1.0 GB available for Microsoft .NET Framework 3.5, SP1 - 100 MB for Agilent IO Libraries Suite • Video - Super VGA (800x600) 256 colors or more • Browser - Microsoft Internet Explorer 6.0 or greater Windows Vista SP1 and SP2 (32-bit and 64-bit), Business, Ultimate, Enterprise, Home Basic, and Home Premium • 1 GHz 32-bit (x86), 1 GHz 64-bit (x64), no support for Itanium64 • 1GB minimum • Hard Disk Space - 1.0 GB available for Microsoft .NET Framework 3.5, SP1 - 100 MB for Agilent IO Libraries Suite • Video - Support for DirectX 9 graphics with 128 MB graphics memory recommended (Super VGA graphics is supported) • Browser - Microsoft Internet Explorer 7 or greater Windows 7 (with or without SP1) (32- and 64-bit), Home Basic, Home Premium, Professional, Ultimate, and Enterprise, or Windows 8 • 1 GHz 32-bit (x86), 1 GHz 64-bit (x64), no support for Itanium64 • 1GB minimum • Hard Disk Space - 1.0 GB available for Microsoft .NET Framework 3.5, SP1 - 100 MB for Agilent IO Libraries Suite • Video - Support for DirectX 9 graphics with 128 MB graphics memory recommended (Super VGA graphics is supported) • Browser - Microsoft Internet Explorer 7 or greater

	Windows Server 2008 R2 (with or without SP1) (64-bit) Standard and Enterprise • 1.4 GHz (x64 processor) or 1.3GHz (Dual Core), no support for Itanium64 • 1GB minimum • Hard Disk Space - 1.0 GB available for Microsoft .NET Framework 3.5, SP1 - 100 MB for Agilent IO Libraries Suite • Video - Support for DirectX 9 graphics with 128 MB graphics memory recommended (Super VGA graphics is supported) • Browser - Microsoft Internet Explorer 7 or greater
Supported standards	• Support USB 2.0 high speed and full speed • Standard USB endpoints supported • IEEE-488.1 and IEEE-488.2 compatible • SICL and VISA 2.2
Supported applications (with IntuiLink)	• Microsoft Excel 97 and 2000 • Microsoft Word 97 and 2000 • Check the web for latest supported applications
Supported software development applications	• Visual Basic 6.0 • Visual Studio® .NET • BASIC for Windows • Visual C++ 6.0 • Agilent VEE 6.0 or greater • LabVIEW 6.0 or greater
GENERAL CHARACTERISTICS	
Power	USB bus-powered device, +5 V, 500 mA (max), 200 mA (typ)
GPIB transfer rate	1.15 MB/s
Connectors	Standard 24-pin IEEE-488, Standard USB A
USB hubs	Self-powered hubs
Parallel polling	A single parallel poll can easily check up to eight individual devices at once corresponding to the number of data lines on the GPIB.
Dimensions	105 mm (L) x 64 mm (W) x 30 mm (H) (includes connectors)
Weight	215 grams
Cable	2.5 meters, shielded, connector rated for 1500 insertions
LED Indicators	READY, ACCESS, FAIL
Warranty	3 years
Maximum connections	Maximum 4 converters can be connected to the PC
Instrument connection	14 instruments – daisy chain via GPIB
Configuration	Plug-and-play
Pollution degree	2

ENVIRONMENTAL SPECIFICATIONS	
Operating environment	0 °C to 55 °C
Storage environment	–40 °C to +70 °C
Operating humidity	Up to 90 % at 40 °C non-condensing
Storage humidity	Up to 90 % at 65 °C non-condensing
ORDERING INFORMATION	
Interface	82357B USB/GPIB Interface
Options	Opt 0B1 - Add manual set
Accessories	None

Supplementary Information

This section provides supplementary information on the 82357B performance, including supported GPIB modes.The 82357B is defined as a controller as it can be (and is required to be) the system controller.

GPIB Modes of Operation Supported

The 82357B supports standard GPIB modes of operation, except for:

- Passing of Active Controller
- Non-system Controller mode which prevents using SICL Commander sessions or VISA Servant sessions

IEEE-488.1 and IEEE-488.2 Compliance

The 82357B is in full compliance with IEEE 488.1 and IEEE-488.2 specifications. The 82357B fully supports IEEE-488.1 subsets AH1, C1, C2, C3, C4, C27, DC0, DT0, LE3, PP0, RL0, SH1, SR0, and TE7.

SRQ Response Time

SRQ response time is slower than with the 82350 PCI GPIB interface as an artifact of the USB implementation. In addition, sharing the USB bus with other devices may impact GPIB performance.

Default T1 Delay

The default T1 delay for the 82357B is 800 nsec. See "Setting 82357B high-performance operation" on page 26 in Chapter 2, "Using the Agilent 82357B" for details.

Maximum 82357B System Configuration

Up to four 82357Bs on a system have been successfully tested.

THIS PAGE HAS BEEN INTENTIONALLY LEFT BLANK.

Index

A

Agilent IO Libraries Suite, verify installation, 32
Agilent telephone number, 37
Agilent Web site, 37

B

Before You Install, 2

C

Changing Configuration Parameters, 23
changing configuration parameters, 23
Changing Modes of Operation, 24
changing modes of operation, 24
check device manager, 31
Check IO Control Operation, 35
Check PC, 30
Check Shipment, 2
Check USB Cables, 30
Check USB Interface, 30
Check USB Scanner, 36
checking shipment, 2, 30
configuration parameters, changing, 23
configuration parameters, setting, 23
connecting 82357A to USB hub, 7
Connecting GPIB Instruments, 9
Connection Expert, 9, 14, 20, 21, 23, 24, 35, 36

D

Device Manager checking, 31

E

Environmental Requirements, ix
Example
  IO Interface Configuration, 14
examples
  IO Interface Configuration, 14

H

Hardware Checks, 30
Hardware Description, 5
High-Performance Operation, setting, 26

I

Initial Operating States, 18
initial operating states, 18
Installing Agilent IO Libraries Suite, 3
interface ID, 14
Interface Name, 14
IO Control Operation checking, 35
IO interface, 14
IO Libraries Suite, checking for installation, 32
iopen, 14

L

LED States, 18
LED states, 18
Logical Unit Number, 14

M

Modes of Operation, changing, 24
modes of operation, changing, 24
multiple 82357A operation, 21
Multiple 82357B Operation, 21
Multiple Mode of Operation, 19
multiple mode of operation, 19

P

Parallel Polling, 41
PC
  power management, 32
  suspend, 32
PC Checking, 30
PC Rebooting, 30
PC, rebooting, 30
Programming GPIB Instruments, 13
programming GPIB instruments, 13
Programming via 82357B, 11

R

rebooting the PC, 30
Restricted Rights, iii

S

setting configuration parameters, 23
setting high-performance operation, 26
setting timeout floor values, 25
single 82357A operation, 20
Single 82357B Operation, 20
SRQ Operation, 22
SRQ operation, 22
suspend/resume operation, 32

T

telephone number, Agilent, 37
troubleshooting, 31
  suspend/resume operation, 32

V

viOpen, 14
VISA Assistant, 11

W

warranty service, iii
Web site, Agilent, 37

THIS PAGE HAS BEEN INTENTIONALLY LEFT BLANK.

www.agilent.com

Contact us

To obtain service, warranty, or technical support assistance, contact us at the following phone numbers:

United States:
(tel) 800 829 4444 (fax) 800 829 4433
Canada:
(tel) 877 894 4414 (fax) 800 746 4866
China:
(tel) 800 810 0189 (fax) 800 820 2816
Europe:
(tel) 31 20 547 2111
Japan:
(tel) 0120 (421) 345 (fax) 0120 (421) 678
Korea:
(tel) (080) 769 0800 (fax) (080) 769 0900
Latin America:
(tel) (305) 269 7500
Taiwan:
(tel) 0800 047 866 (fax) 0800 286 331
Other Asia Pacific Countries:
(tel) (65) 6375 8100 (fax) (65) 6755 0042

Or visit Agilent worldwide Web at:
www.agilent.com/find/assist

Product specifications and descriptions in this document are subject to change without notice. Always refer to the Agilent Web site for the latest revision.

© Agilent Technologies, Inc. 2006–2013

Seventh Edition, March 19, 2013

82357-90003

Agilent Technologies