Agilent 75000 Series B

Agilent E1328A
4-Channel D/A Converter Module

Service Manual

Enclosed is the Service Manual for the Agilent E1328A 4-Channel D/A Converter Module. Insert this manual, along with any other VXIbus manuals that you have, into the binder that came with your Agilent Technologies mainframe.

Agilent Technologies

Manual Part Number: E1328-90011
Printed in Malaysia E0912

Contents

Agilent E1328A 4-Channel D/A Converter Service Manual

Edition 2 Rev 2

Chapter 1. General Information 9

Introduction 9
Safety Considerations 10
Warnings and Cautions 10
DAC Description 12
DAC Specifications 12
DAC Serial Numbers 13
DAC Options 13
Recommended Test Equipment 14

Chapter 2. Installation 15

Introduction 15
Initial Inspection 15
Preparation for Use 15
Shipping Guidelines 16

Chapter 3. Operating Instructions 17

Introduction 17
D/A Converter Operation 17
Operator's Check 17
Self-Test Procedure 18
Example: D/A Converter Self-Test 18

Chapter 4. Verification Tests 19

Introduction 19
Test Conditions / Procedures 19
Performance Test Record 20
Verification Test Examples 20
Functional Verification Tests 21
DAC Self-Test 21
Voltage Compliance Tests 21
Test Procedure (Positive Voltage Compliance) 22
Test Procedure (Negative Voltage Compliance) 23
Example: Positive Voltage Compliance 23
Current Compliance Tests 24
Test Procedure (Positive Current Compliance) 26
Test Procedure (Negative Current Compliance) 26
Example: Positive Current Compliance 27
Operation Verification Tests 28
Performance Verification Tests 29
Voltage Accuracy Measurements Test 29
Counter Accuracy Measurements Test 31
Performance Test Record 33

Chapter 5. Adjustments **37**
Introduction 37
Voltage Adjustments 37
Equipment Setup 38
Adjustment Procedures 39
Example: Voltage Adjustments 39
Current Adjustments 40
Equipment Setup 40
Adjustment Procedures 41
Example: Current Adjustments 41

Chapter 6. Replaceable Parts **43**
Introduction 43
Exchange Assemblies 43
Ordering Information 43
Replaceable
Parts List 44

Chapter 7. Manual Changes **47**
Introduction 47

Chapter 8. Service **49**
Introduction 49
Equipment Required 49
Service Aids 49
Troubleshooting Techniques 49
Identifying the Problem 49
Testing the DAC 50
Repair / Maintenance Guidelines 52
ESD Precautions 52
Soldering Printed Circuit Boards 53
Post-Repair Safety Checks 53

Appendix A. Calculating D/A Converter Accuracy **55**
Introduction 55
DAC Accuracy Calculations 56
DC Voltage Accuracy Equations 56
DC Current Accuracy Equations 56
Agilent 3458A Measurement Uncertainty Calculations 57
Calculate DCV Measurement Uncertainty 57
Calculate DCI Measurement Uncertainty 57
Test Accuracy Ratio (T A R) Calculations 58

Chapter B. Verification Tests - C Programs **61**
Functional Verification Test 61
Example: Self Test 61
Example: Positive Voltage Compliance 62
Example: Positive Current Compliance 63
Performance Verification Tests 65
Example: Voltage Accuracy Measurements 65
Example: Current Accuracy Measurements 66

Adjustments 68
Example: Voltage Adjustments 68
Example: Current Adjustments 69

Certification

Agilent Technologies certifies that this product met its published specifications at the time of shipment from the factory. Agilent Technologies further certifies that its calibration measurements are traceable to the United States National Institute of Standards and Technology (formerly National Bureau of Standards), to the extent allowed by that organization's calibration facility, and to the calibration facilities of other International Standards Organization members.

Warranty

This Agilent Technologies product is warranted against defects in materials and workmanship for a period of one (1) year from date of shipment. Duration and conditions of warranty for this product may be superseded when the product is integrated into (becomes a part of) other Agilent products. During the warranty period, Agilent Technologies will, at its option, either repair or replace products which prove to be defective.

For warranty service or repair, this product must be returned to a service facility designated by Agilent Technologies. Buyer shall prepay shipping charges to Agilent and Agilent shall pay shipping charges to return the product to Buyer. However, Buyer shall pay all shipping charges, duties, and taxes for products returned to Agilent from another country.

Agilent warrants that its software and firmware designated by Agilent for use with a product will execute its programming instructions when properly installed on that product. Agilent does not warrant that the operation of the product, or software, or firmware will be uninterrupted or error free.

Limitation Of Warranty

The foregoing warranty shall not apply to defects resulting from improper or inadequate maintenance by Buyer, Buyer-supplied products or interfacing, unauthorized modification or misuse, operation outside of the environmental specifications for the product, or improper site preparation or maintenance.

The design and implementation of any circuit on this product is the sole responsibility of the Buyer. Agilent does not warrant the Buyer's circuitry or malfunctions of Agilent products that result from the Buyer's circuitry. In addition, Agilent does not warrant any damage that occurs as a result of the Buyer's circuit or any defects that result from Buyer-supplied products.

NO OTHER WARRANTY IS EXPRESSED OR IMPLIED. Agilent SPECIFICALLY DISCLAIMS THE IMPLIED WARRANTIES OF MERCHANTABILITY AND FITNESS FOR A PARTICULAR PURPOSE.

Exclusive Remedies

THE REMEDIES PROVIDED HEREIN ARE BUYER'S SOLE AND EXCLUSIVE REMEDIES. Agilent SHALL NOT BE LIABLE FOR ANY DIRECT, INDIRECT, SPECIAL, INCIDENTAL, OR CONSEQUENTIAL DAMAGES, WHETHER BASED ON CONTRACT, TORT, OR ANY OTHER LEGAL THEORY.

Notice

The information contained in this document is subject to change without notice. Agilent Technologies MAKES NO WARRANTY OF ANY KIND WITH REGARD TO THIS MATERIAL, INCLUDING, BUT NOT LIMITED TO, THE IMPLIED WARRANTIES OF MERCHANTABILITY AND FITNESS FOR A PARTICULAR PURPOSE. Agilent shall not be liable for errors contained herein or for incidental or consequential damages in connection with the furnishing, performance or use of this material. This document contains proprietary information which is protected by copyright. All rights are reserved. No part of this document may be photocopied, reproduced, or translated to another language without the prior written consent of Agilent Technologies, Inc. Agilent assumes no responsibility for the use or reliability of its software on equipment that is not furnished by Agilent.

U.S. Government Restricted Rights

The Software and Documentation have been developed entirely at private expense. They are delivered and licensed as "commercial computer software" as defined in DFARS 252.227- 7013 (Oct 1988), DFARS 252.211-7015 (May 1991) or DFARS 252.227-7014 (Jun 1995), as a "commercial item" as defined in FAR 2.101(a), or as "Restricted computer software" as defined in FAR 52.227-19 (Jun 1987)(or any equivalent agency regulation or contract clause), whichever is applicable. You have only those rights provided for such Software and Documentation by the applicable FAR or DFARS clause or the Agilent standard software agreement for the product involved.

Agilent E1328A 4-Channel D/A Converter Module Service Manual
Edition 2 Rev 3

Copyright © 1996-2006 Agilent Technologies, Inc. All Rights Reserved.

Printing History

The Printing History shown below lists all Editions and Updates of this manual and the printing date(s). The first printing of the manual is Edition 1. The Edition number increments by 1 whenever the manual is revised. Updates, which are issued between Editions, contain replacement pages to correct the current Edition of the manual. Updates are numbered sequentially starting with Update 1. When a new Edition is created, it contains all the Update information for the previous Edition. Each new Edition or Update also includes a revised copy of this printing history page. Many product updates or revisions do not require manual changes and, conversely, manual corrections may be done without accompanying product changes. Therefore, do not expect a one-to-one correspondence between product updates and manual updates.

Edition 1 . . . . . June 1991

Edition 2 (Part Number E1328-90011). . . . . June 1996

Edition 2 Rev 2 (Part Number E1328-90011) . . . . . July 2006

Edition 2 Rev 3 (Part Number E1328-90011) . . . . . .September 2012

Safety Symbols

Instruction manual symbol affixed to product. Indicates that the user must refer to the manual for specific WARNING or CAUTION information to avoid personal injury or damage to the product.

Indicates the field wiring terminal that must be connected to earth ground before operating the equipment—protects against electrical shock in case of fault.

or

Frame or chassis ground terminal—typically connects to the equipment's metal frame.

Alternating current (AC).

Direct current (DC).

Indicates hazardous voltages.

WARNING Calls attention to a procedure, practice, or condition that could cause bodily injury or death.

CAUTION Calls attention to a procedure, practice, or condition that could possibly cause damage to equipment or permanent loss of data.

WARNINGS

The following general safety precautions must be observed during all phases of operation, service, and repair of this product. Failure to comply with these precautions or with specific warnings elsewhere in this manual violates safety standards of design, manufacture, and intended use of the product. Agilent Technologies assumes no liability for the customer's failure to comply with these requirements.

Ground the equipment: For Safety Class 1 equipment (equipment having a protective earth terminal), an uninterruptible safety earth ground must be provided from the mains power source to the product input wiring terminals or supplied power cable.

DO NOT operate the product in an explosive atmosphere or in the presence of flammable gases or fumes.

For continued protection against fire, replace the line fuse(s) only with fuse(s) of the same voltage and current rating and type.
DO NOT use repaired fuses or short-circuited fuse holders.

Keep away from live circuits: Operating personnel must not remove equipment covers or shields. Procedures involving the removal of covers or shields are for use by service-trained personnel only. Under certain conditions, dangerous voltages may exist even with the equipment switched off. To avoid dangerous electrical shock, DO NOT perform procedures involving cover or shield removal unless you are qualified to do so.

DO NOT operate damaged equipment: Whenever it is possible that the safety protection features built into this product have been impaired, either through physical damage, excessive moisture, or any other reason, REMOVE POWER and do not use the product until safe operation can be verified by service-trained personnel. If necessary, return the product to an Agilent Technologies Sales and Service Office for service and repair to ensure that safety features are maintained.

DO NOT service or adjust alone: Do not attempt internal service or adjustment unless another person, capable of rendering first aid and resuscitation, is present.

DO NOT substitute parts or modify equipment: Because of the danger of introducing additional hazards, do not install substitute parts or perform any unauthorized modification to the product. Return the product to an Agilent Technologies Sales and Service Office for service and repair to ensure that safety features are maintained.

Declaration of Conformity

Declarations of Conformity for this product and for other Agilent products may be downloaded from the Internet. There are two methods to obtain the Declaration of Conformity:

- Go to **http://regulations.corporate.agilent.com/DoC/search.htm** . You can then search by product number to find the latest Declaration of Conformity.
- Alternately, you can go to the product web page **(www.agilent.com/find/E1328A),** click on the Document Library tab then scroll down until you find the Declaration of Conformity link.

What’s in this Manual

Manual Overview

This manual shows how to service the Agilent E1328A 4-Channel D/A Converter. Additional manuals which may be required for servicing the D/A Converter include the *Agilent E1328A User’s Manual* which contains D/A Converter operation, installation, and configuration information, and the appropriate mainframe user’s manual(s) for mainframe operation, installation and configuration information.

Manual Content

Chapter	Title	Content
1	General Information	Provides a basic description, and lists available options and accessories. Also lists the tools and test equipment required for service.
2	Installation	Procedures to install the D/A Converter, perform initial inspection, prepare for use, and store and ship the D/A Converter.
3	Operating Instructions	Procedures to operate the D/A Converter and perform operator’s check.
4	Verification Tests	Functional verification, operation verification, and performance verification tests to test the D/A Converter.
5	Adjustments	Procedures to adjust the D/A Converter to within its rated specifications.
6	Replaceable Parts	Lists part numbers for user replaceable parts in the D/A Converter. Provides information on ordering spare parts and module exchange.
7	Manual Changes	Information to adapt this manual to instruments whose serial numbers are lower than those listed on the title page.
8	Service	Procedures to aid in fault isolation and repair of the D/A Converter.
A	Calculating D/A Converter Accuracy	Shows how D/A Converter accuracy, measurement uncertainty, and test accuracy ratios (TARs) are calculated.
B	Verification Tests - C Programs	Gives example C programs to implement the the verification tests and adjustments.

Agilent 75000 Series B Service Documentation

Suggested Sequence to Use Manuals

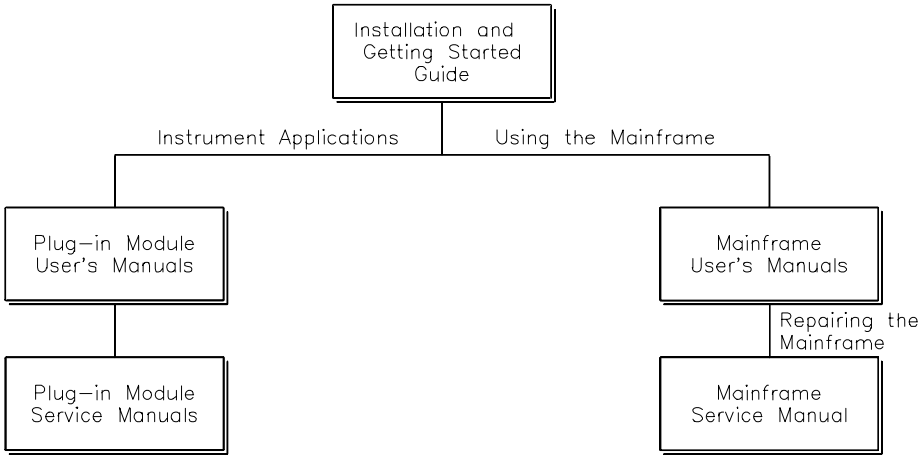

Manual Descriptions

Installation and Getting Started Guide. This manual contains step-by-step instructions for all aspects of plug-in module and mainframe installation. Introductory programming information and examples are also included.

Mainframe User's Manual. This manual contains programming information for the mainframe, front panel operation information (for the Agilent E1301B mainframe), and general programming information for instruments installed in the mainframe.

Plug-In Module User's Manuals. These manuals contain plug-in module programming and configuration information. Each manual contains examples for the most-used module functions, and a complete SCPI command reference for the plug-in module.

Mainframe Service Manual. This manual contains service information for the mainframe. It contains information for ordering replaceable parts and exchanging assemblies. Information and procedures for performance verification, adjustment, preventive maintenance, troubleshooting, and repair are also included.

Plug-In Module Service Manuals. These manuals contain plug-in module service information. Each manual contains information for exchanging the module and/or ordering replaceable parts. Depending on the module, information and procedures for functional verification, operation verification, performance verification, adjustment, preventive maintenance, troubleshooting, and repair are also provided.

Chapter 1
General Information

Introduction

This Agilent E1328A Service Manual contains information required to test, adjust, troubleshoot, and repair the Agilent E1328A B-Size VXI 4-Channel D/A Converter (DAC). See the *Agilent E1328A User's Manual* for additional information on the Agilent E1328A DAC. Figure 1-1 shows the Agilent E1328A DAC.

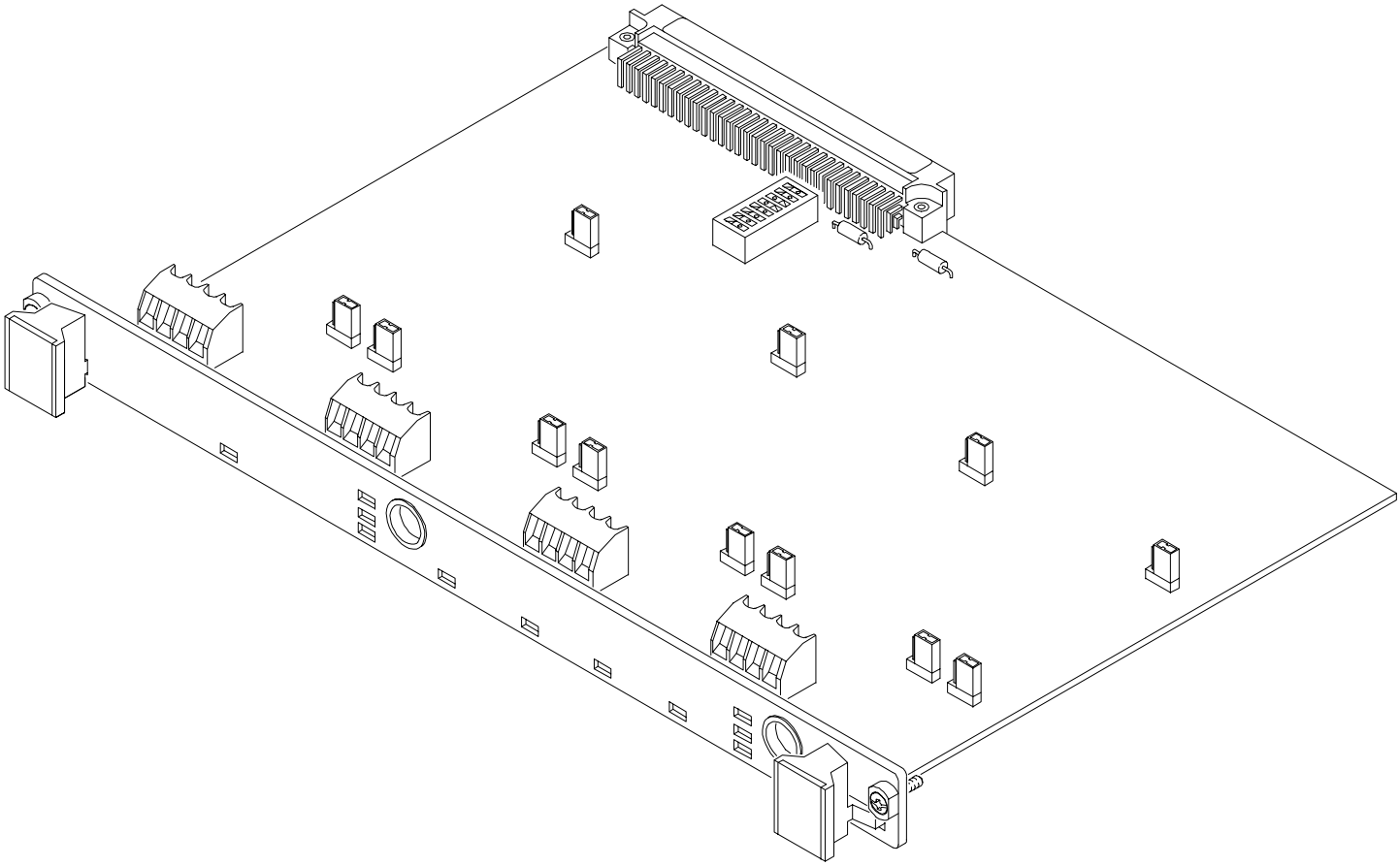

Figure 1-1. Agilent E1328A 4-Channel D/A Converter

Safety Considerations

This product is a Safety Class I instrument that is provided with a protective earth terminal when installed in the mainframe. The mainframe, DAC, and all related documentation should be reviewed for familiarization with safety markings and instructions before operation or service.

Refer to the WARNINGS page (page iii) in this manual for a summary of safety information. Safety information for preventive maintenance, testing, adjusting, and service follows and is also found throughout this manual.

Warnings and Cautions

This section contains WARNINGS which must be followed for your protection and CAUTIONS which must be followed to avoid damage to the equipment when performing instrument maintenance or repair.

WARNING

SERVICE-TRAINED PERSONNEL ONLY. The information in this manual is for service-trained personnel who are familiar with electronic circuitry and are aware of the hazards involved. To avoid personal injury or damage to the instrument, do not perform procedures in this manual or do any servicing unless you are qualified to do so.

CHECK MAINFRAME POWER SETTINGS. Before applying power, verify that the mainframe setting matches the line voltage and the correct fuse is installed. An uninterruptible safety earth ground must be provided from the main power source to the mainframe input wiring terminals, power cord, or supplied power cord set.

GROUNDING REQUIREMENTS. Interruption of the protective (grounding) conductor (inside or outside the mainframe) or disconnecting the protective earth terminal will cause a potential shock hazard that could result in personal injury. (Grounding one conductor of a two-conductor outlet is not sufficient protection.)

IMPAIRED PROTECTION. Whenever it is likely that instrument protection has been impaired, the mainframe must be made inoperative and be secured against any unintended operation.

REMOVE POWER IF POSSIBLE. Some procedures in this manual may be performed with power supplied to the mainframe while protective covers are removed. Energy available at many points may, if contacted, result in personal injury. (If maintenance can be performed without power applied, the power should be removed.)

USING AUTOTRANSFORMERS. If the mainframe is to be energized via an autotransformer (for voltage reduction) make sure the common terminal is connected to neutral (that is, the grounded side of the main's supply).

WARNING

CAPACITOR VOLTAGES. Capacitors inside the mainframe may remain charged even when the mainframe has been disconnected from its source of supply.

USE PROPER FUSES. For continued protection against fire hazard, replace the line fuse(s) only with fuses of the same current rating and type (such as normal blow, time delay, etc.). Do not use repaired fuses or short-circuited fuseholders.

CAUTION

MAXIMUM VOLTAGE. Maximum voltage that may be applied between any two terminals within the same channel is ± 15 Vdc. Do not apply voltage between any pair of terminals if the D/A Converter is turned off.

STATIC ELECTRICITY. Static electricity is a major cause of component failure. To prevent damage to the electrical components in the DAC, observe anti-static techniques when removing a DAC from the mainframe or when working on the DAC. Also, when installing a DAC in a mainframe slot, be sure to tighten the front panel screws.

POWER-UP/DOWN OUTPUTS. At power-up or down, potentials up to 12V may appear across the channel outputs for up to 10 msec.

DAC Description

The Agilent E1328A DAC is an "instrument" in the slots of a VXIbus mainframe. As such, it is assigned an error queue, input and output buffers, status registers, and is allocated a portion of mainframe memory for reading storage.

NOTE

Instruments are based on the logical addresses of the plug-in modules. See the Agilent 75000 Series B Installation and Getting Started Guide to set the addresses to create an instrument.

There are two E1328A DAC functions (see Table 1-1):

- Isolated Voltage DACs
- Isolated Current DACs

Table 1-1. Agilent E1328A 4-Channel D/A Converter Functions

Function/ Feature	Chs	Description
Voltage DAC	1,2,3,4	Output DC voltage up to ± 10.92 V independently on each channel. Can use remote voltage sensing with "no-fault" operation. Connect multiple channels in series to increase the output to ± 48 Vdc for a single module. All four channels are independently isolated and may be floated up to 350 Vdc from ground. Each channel can be calibrated electronically to 24-hour specifications.
Current DAC	1,2,3,4	Output DC current up to ± 21.8 mA independently on each channel. Connect multiple channels in parallel to increase the output to ± 96 mA for a single module. All four channels are independently isolated and may be floated up to 350 Vdc from ground. Each channel can be calibrated electronically to 24-hour specifications.

DAC Specifications

DAC specifications are listed in *Appendix A* of the *Agilent E1328A Users Manual*. These specificaitions are the performance standards or limits against which the instrument may be tested.

DAC Serial Numbers

DACs covered by this manual are identified by a serial number prefix listed on the title page. Agilent Technologies uses a two-part serial number in the form XXXXAYYYYY, where XXXX is the serial prefix, A is the country of origin (A = USA), and YYYYY is the serial suffix. The serial number suffix is assigned sequentially to each instrument.

If the serial number prefix of your instrument is greater than the one listed on the title page, a Manual Update (as required) will explain how to adapt this manual to your instrument. If the serial number prefix is lower than the one listed on the title page, information contained in *Chapter 7 - Manual Changes* explains how to adapt this manual to your instrument.

DAC Options

There are no electrical or mechanical options available for the Agilent E1328A DAC. However, you can order Option 1BN which provides a MIL-STD-45662A Calibration Certificate, or Option 1BP which provides the Calibration Certificate and measurement data. Contact your nearest Agilent Technologies Sales and Service Office for information on Options 1BN and 1BP.

Recommended Test Equipment

Table 1-2 lists the test equipment recommended for testing, adjusting, and servicing the Agilent E1328A DAC. Essential requirements for each piece of test equipment are described in the *Requirements* column.

Table 1-2. Recommended Test Equipment

Instrument	Requirements	Recommended Model	Use*
Controller, GPIB	GPIB compatibility as defined by IEEE Standard 488-1978 and the identical ANSI Standard MC1.1: SH1, AH1, T2, TE0, L2, LE0, SR0, RL0, PP0, DC0, DT0, and C1, 2, 3, 4, 5	HP 9000 Series 300 or IBM compatible PC with BASIC	A,F,O, P,T
Mainframe	Compatible with DAC	Agilent E1300B, E1301B, E1302A, or E1401B/T, E1421A (requires Agilent E1306A)	A,F,O, P,T
DC Standard	Voltage Range: -20.0 V to +20.0 V	Datron 4708 with Option 10	F,O,P
Digital Multimeter	Voltage Range: ± 10 VDC Current Range: ± 20 mA DC Accuracy: ± (.015% reading + 1 mV) ± (.02% reading + 1 μA)	Agilent 3458A multimeter or Agilent E1326B multimeter	A,F,O, P,T

*F = Functional Verification Tests, O = Operation Verification Tests, P = Performance Verification Tests, A = Adjustments, T = Troubleshoooting

Chapter 2
Installation

Introduction

This chapter provides information to install the Agilent E1328A D/A Converter, including initial inspection, preparation for use, environment, storage and shipment.

Initial Inspection

Inspect the shipping container for damage. If the shipping container or cushioning material is damaged, keep the container until the shipment contents have been checked and the instrument has been checked mechanically and electrically. See Chapter 1 (Figure 1-1) for shipment contents. See Chapter 4 for procedures to check electrical performance.

WARNING

To avoid possible hazardous electrical shock, do not perform electrical tests if there are signs of shipping damage to any portion of the outer enclosure (covers, panels, etc.).

If the contents are incomplete, if there is mechanical damage or defect, or if the instrument does not pass the electrical performance tests, notify your nearest Agilent Technologies Sales and Service Office. If the shipping container is damaged or the cushioning material shows signs of stress, notify the carrier as well as Agilent Technologies, and keep the shipping materials for the carrier's inspection.

Preparation for Use

See Chapter 2 of the *Agilent E1328A User's Manual* to prepare the Agilent E1328A D/A Converter for use. See the appropriate mainframe user's manual(s) to prepare your mainframe. If your mainframe is not manufactured by Agilent Technologies, consult the manufacturer for a list of available manual(s).

Recommended operating environment for the Agilent E1328A D/A Converter is 0°C to $+55^{o}$C with humidity <65% relative ($0\ ^{o}$C to $+40^{o}$C). The instrument should be stored in a clean, dry environment. For storage and shipment, the temperature range is -40°C to $+75^{o}$C with humidity <65% relative humidity (0°C to $+40^{o}$C).

Shipping Guidelines

Follow the steps in Figure 2-1 to return the Agilent E1328A D/A Converter to a Agilent Technologies Sales and Support Office or Service Center.

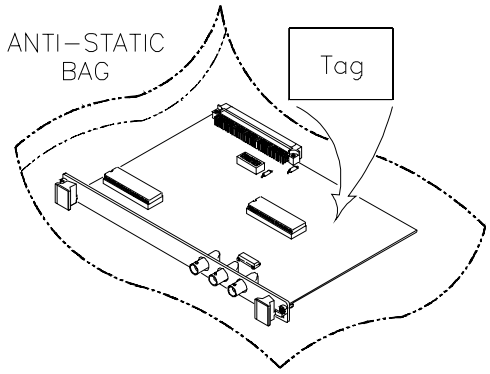

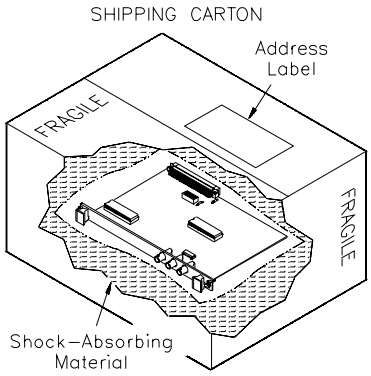

1 Prepare the D/A Converter

- Remove user wiring from the module
- Attach tag to module/pod that identifies
  - Owner
  - Model Number/Serial Number
  - Service Required
- Place tagged device in approved anti-static bag

2 Package the D/A Converter

- Place packaged D/A Converter in shipping carton*
- Place 75 to 100 mm (3 to 4 inches) of shock-absorbing material around the D/A Converter
- Seal the shipping carton securely
- Mark the shipping carton FRAGILE

3 Ship the D/A Converter to Agilent Technologies

- Place address label on shipping carton
- Send carton to Agilent Technologies

Figure 2-1. Packaging/Shipping Guidelines

* We recommend that you use the same shipping materials as those used in factory packaging (available from Agilent Technologies). For other (commercially-available) shipping materials, use a double wall-carton with minimum 2.4 MPa (350 psi) test.

Chapter 3
Operating Instructions

Introduction

This chapter lists operating information for the Agilent E1328A D/A Converter, including:

- D/A Converter operation
- Operator's check (self-test)

D/A Converter Operation

See the *Agilent E1328A 4-Channel D/A Converter User's Manual* for D/A Converter operation, including:

- Getting started
- Configuring the D/A Converter
- Using the D/A Converter
- Understanding the D/A Converter

- D/A Converter command reference
- D/A Converter specifications
- D/A Converter error messages

Operator's Check

The Operator's Check for the Agilent E1328A D/A Converter consists of sending the self-test (*TST?) command and checking the return. The operator's check can be used at any time to verify the D/A Converter is connected properly and is responding to the self-test command. See *Chapter 8 - Service* for a list of D/A Converter self-test errors.

CAUTION

The *TST? command temporarily resets the D/A Converter (to 0 V or 0 A output) on each channel. Make sure any devices connected to the DAC will not be adversely affected before using *TST?.

As required, see the mainframe user's manual for information on address selection. See the *Agilent E1328A User's Manual* for information on D/A Converter SCPI commands.

Self-Test Procedure

1. Verify the D/A Converter is properly installed in the mainframe and the mainframe has passed its power-on sequence test. See the Agilent 75000 Series B System Installation and Getting Started Guide for information on mainframe power-on sequence tests.

2. Execute the D/A Converter self-test using the *TST? command (see example following).

3. A "0" returned means no self-test failure, while "-330" returned means a failure was detected. See *Chapter 8 - Service* for trouble shooting information (see NOTE following).

NOTE

Test failures can be caused by improper cabling, improper selection of the interface select code, primary, and/or secondary address setting. Verify proper connection and address selection before trouble shooting.

Example: D/A Converter Self-Test

An example follows which uses an HP 9000 Series 300 computer with BASIC and a D/A Converter address of 70909.

```
10  OUTPUT 70909;"*TST?"        Send the self-test command
20  ENTER 70909;A               Enter self-test result
30  PRINT A
40  END
```

Chapter 4
Verification Tests

Introduction

The three levels of test procedures described in this chapter are used to verify that the Agilent E1328A D/A Converter (DAC):

- is fully functional (Functional Verification)
- meets selected testable specifications (Operation Verification)
- meets all testable specifications (Performance Verification)

WARNING

Do not perform any of the following verification tests unless you are a qualified, service-trained person and have read the WARNINGS and CAUTIONS in Chapter 1.

Test Conditions / Procedures

For valid tests, all test equipment and the Agilent 3458A multimeter must have a one-hour warmup, the line voltage must be 115/230 Vac ± 10%, and Agilent 3458A ACAL must be performed no more than 24 hours before the tests. See Table 1-2, *Recommended Test Equipment* for test equipment requirements.

For best test accuracy, the ambient temperature of the test area should be between 18°C and 28°C and stable to within ± 1°C. You should perform the Performance Verification tests at least once a year. For heavy use or severe operating environments, perform the tests more often.

The verification tests assume the person performing the tests understands how to operate the mainframe, the DAC and specified test equipment. The test procedures do not specify equipment settings for test equipment except in general terms. It is assumed a qualified, service-trained person will select and connect the cables, adapters, and probes required for the test.

Performance Test Record

Table 4-2, *Performance Test Record* for the Agilent E1328A DAC, at the end of this chapter, provides space to enter the results of each Performance Verification test and to compare the results with the upper and lower limits for the test. You can make a copy of this form, if desired.

NOTE

The upper and lower limits in the Performance Test Record assume the test equipment used is calibrated and operating at peak performance. If this is not the case/ problems can occur.

For example, an uncalibrated Agilent 3458A multimeter may cause what seems to be an inaccurate measurement. This condition must be considered when observed measurements do not agree with the performance test limits.

The value in the "Measurement Uncertainty" column of Table 4-2 is derived from the specifications for the Agilent 3458A multimeter used for the test, and represents the expected accuracy of the Agilent 3458A. The value in the "Test Accuracy Ratio (TAR)" column of Table 4-2 is the ratio of DAC accuracy to Agilent 3458A measurement uncertainty. If the TAR is ≤ 10:1, the ratio is rounded to the nearest integer. If the TAR is ≥ 10:1, the TAR is shown as >10:1.

Verification Test Examples

Each Performance Verification Test includes an example program to perform the test. Each example uses address 70909 for the DAC, and an HP 9000 Series 200/300 computer running BASIC commands. You may need to change the DAC address and/or command syntax to perform the examples for your setup.

As required, see the mainframe user's manual for information on address selection and cabling guidelines. See the *Agilent E1328A User's Manual* for information on Standard Commands for Programmable Instruments (SCPI commands) for the DAC.

Functional Verification Tests

The functional verification tests for the Agilent E1328A DAC can be performed at any time to verify the DAC is functional and is communicating with the mainframe, external computer and/or external terminal. The functional tests for the Agilent E1328A DAC are:

- DAC Self-Test
- Voltage Compliance Tests (Optional)
- Current Compliance Tests (Optional)

DAC Self-Test

This test verifies the DAC is communicating with the mainframe, external controller, and/or external terminal by performing a self-test (*TST? command). See "Operator's Checks" in Chapter 3 for a description of the DAC self-test.

Voltage Compliance Tests

These OPTIONAL tests measure the voltage compliance on each channel of the DAC.

Positive Voltage Compliance Tests

For positive voltage compliance tests, each channel to be tested is set for UNCALIBRATED MAX voltage output (+ 12V). A DC source is connected to V+ and S+ of the channel to be tested. The source is set to +5V and increased in +0.5V steps until the channel output (as measured with an Agilent 3458A multimeter) stops increasing. If the channel maximum output is ≥ + 15V, the test passes.

Negative Voltage Compliance Tests

For negative voltage compliance tests, each channel to be tested is set for UNCALIBRATED MIN voltage output (-12V). A DC source is connected to V- and S- of the channel to be tested. The source is set to -5V and increased in -0.5V steps until the channel output (as measured with an Agilent 3458A multimeter) stops increasing. If the channel minimum output is ≤ -15V, the test passes.

Equipment Setup

Connect the DC source (Datron 4708 with Option 10) and Agilent 3458A multimeter to Channel 1 as shown in Figure 4-1. (Be sure to set all three jumpers on the channel to the V position.) Set the DC source output to +5.0 V dc. Set the Agilent 3458A to DCV function and set NPLC 100.

NOTE

For best measurement accuracy, perform an Agilent 3458A multimeter ACAL not more than 24 hours prior to these tests.

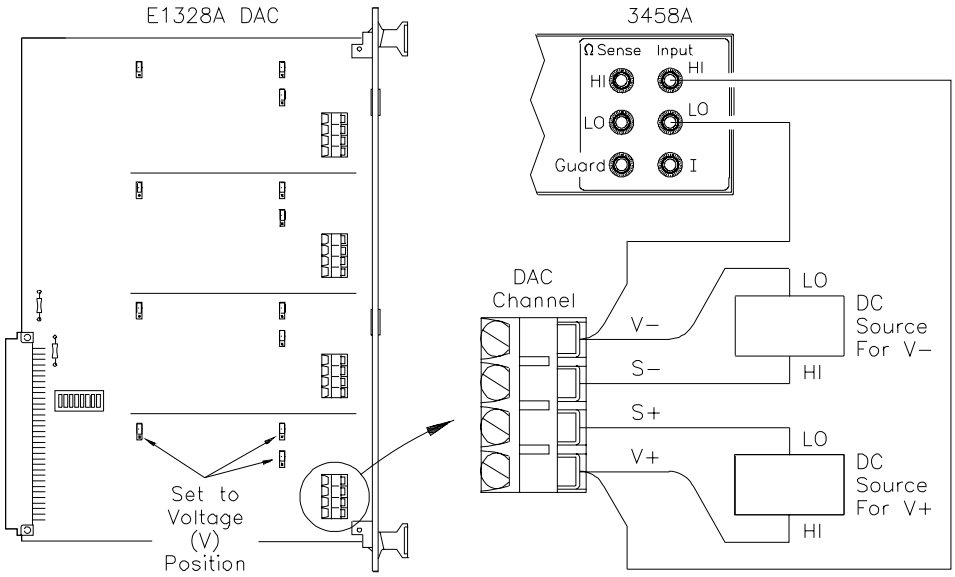

Figure4-1. Voltage Compliance Test Connections

Test Procedure (Positive Voltage Compliance)

1. Set three jumpers on each channel to the V position

2. Connect DC Source and Agilent 3458A to Channel 1 (see Figure 4-1)

3. Set non-cal mode on Channel 1 with CAL1:STAT OFF

4. Set Channel 1 to max voltage output (+ 12V) with VOLT1 MAX

5. Set DC source to + 5V and measure channel output (in V)

6. Increase DC source output by +0.5V and measure new channel output (in V)

7. Repeat step 6 until channel output stops increasing. If the output voltage is ≥ + 15.0V when the output stops increasing, the test passes.

8. Repeat steps 2 through 7 for Channels 2, 3, and 4 (use CALchan: STAT OFF and VOLTchan MAX)

9. Remove power and disconnect test equipment

Test Procedure (Negative Voltage Compliance)

1. Set three jumpers on each channel to the V position

2. Connect DC Source and Agilent 3458A to Channel 1 (see Figure 4-1)

3. Set non-cal mode on Channel 1 with CAL1:STAT OFF

4. Set Channel 1 to min voltage output (-12V) with VOLT1 MIN

5. Set DC source to -5V and measure channel output (in V)

6. Increase DC source output by -0.5V and measure new channel output (in V)

7. Repeat step 6 until channel output stops increasing. If the output voltage is ≤ -15.0V when the output stops increasing, the test passes.

8. Repeat steps 2 through 7 for Channels 2, 3, and 4 (use CALchan: STAT OFF and VOLTchan MIN)

9. Remove power and disconnect test equipment

Example: Positive Voltage Compliance

This program checks the MEASURED voltage output from the DAC channel being tested. If the measured channel output is ≥ 15.0V when the output stops increasing, the program generates a "test PASSED" indication. If the measured channel output is < 15.0V when the output stops increasing, the program generates a "test FAILED" indication.

NOTE

To use this program for negative voltage compliance tests, change the indicated lines as shown:

```
50    OUTPUT 70909;"VOLT"&VAL$(Chan)&" MIN"
60    Source = -4.5
90    Source = Source-.5
180  IF Value  <= -15 THEN Pass$ = "PASSED"
190  IF Value  > -15 THEN Pass$ = "FAILED"
```

```
10   ! Positive Voltage Compliance Tests
20   !
30   FOR Chan = 1 TO 4
40    OUTPUT 70909;"CAL"&VAL$(Chan)&":STAT OFF"
50    OUTPUT 70909;"VOLT"&VAL$(Chan)&" MAX"
60    Source = 4.5
70    REPEAT
80      PRINT TABXY(1,1),"Voltage Compliance Tests on Channel";Chan
90      Source = Source + .5
100     Old_value = Value
110     PRINT TABXY(4,9),"Set source to ";Source;"Volts DC "
120     PRINT TABXY(4,10),"Measure channel output (in V) "
130     INPUT " Enter channel output (in V) ",Value
140     PRINT TABXY(4,5),"DC Source value = ";Source;"VDC "
150     PRINT TABXY(4,6),"Channel";Chan;"output = ";Value;"VDC   "
160     Result = Value-Old _value
170   UNTIL Result = 0
180   IF Value >= 15 THEN Pass$ = "PASSED"
190   IF Value < 15 THEN Pass$ = "FAlLED"
200   CLEAR SCREEN
210   PRINT TABXY(1,8),"Maximum Channel";Chan;"output =
";Value;"Volts"
220   PRINT TABXY(1,9),"Test ";Pass$;" for Channel";Chan
230   DISP " Press Continue for next channel"
240   PAUSE
250   CLEAR SCREEN
260  NEXT Chan
270  END
```

Current Compliance Tests

These tests measure the current compliance on each channel of the DAC.

Positive Current Compliance Tests

For positive current compliance tests, each channel to be tested is set for UNCALIBRATED MAX current output (+24 mA). A DC source and Agilent 3458A are connected to the channel to be tested. The source is set to + 12V and increased in + 0.5V steps until the channel output decreases to 90% of the maximum current value (decreases to +21.6 mA). If the DC SOURCE voltage is ≥ + 13V when the channel output decreases to 90% of maximum current the test passes.

Negative Current Compliance Tests

For negative current compliance tests each channel to be tested is set for UNCALIBRATED MIN current output (-24 mA). A DC source and Agilent 3458A are connected to the channel to be tested. The source is set to -12V and increased in -0.5V steps until the channel output decreases to 90% of the maximum current value (decreases to -21.6 mA). If the DC SOURCE voltage is ≤ -13V when the channel output decreases to 90% of maximum current, the test passes.

Equipment Setup

Connect the DC source (Datron 4708 with Option 10) and Agilent 3458A multimeter to Channel 1 as shown in Figure 4-2. (Be sure to set all three channel jumpers to the I position.) Then, set the DC source output to +12.0 Vdc. Set the Agilent 3458A to DCI function and set NPLC 100.

NOTE

For best measurement accuracy, perform an Agilent 3458A multimeter ACAL not more than 24 hours prior to these tests.

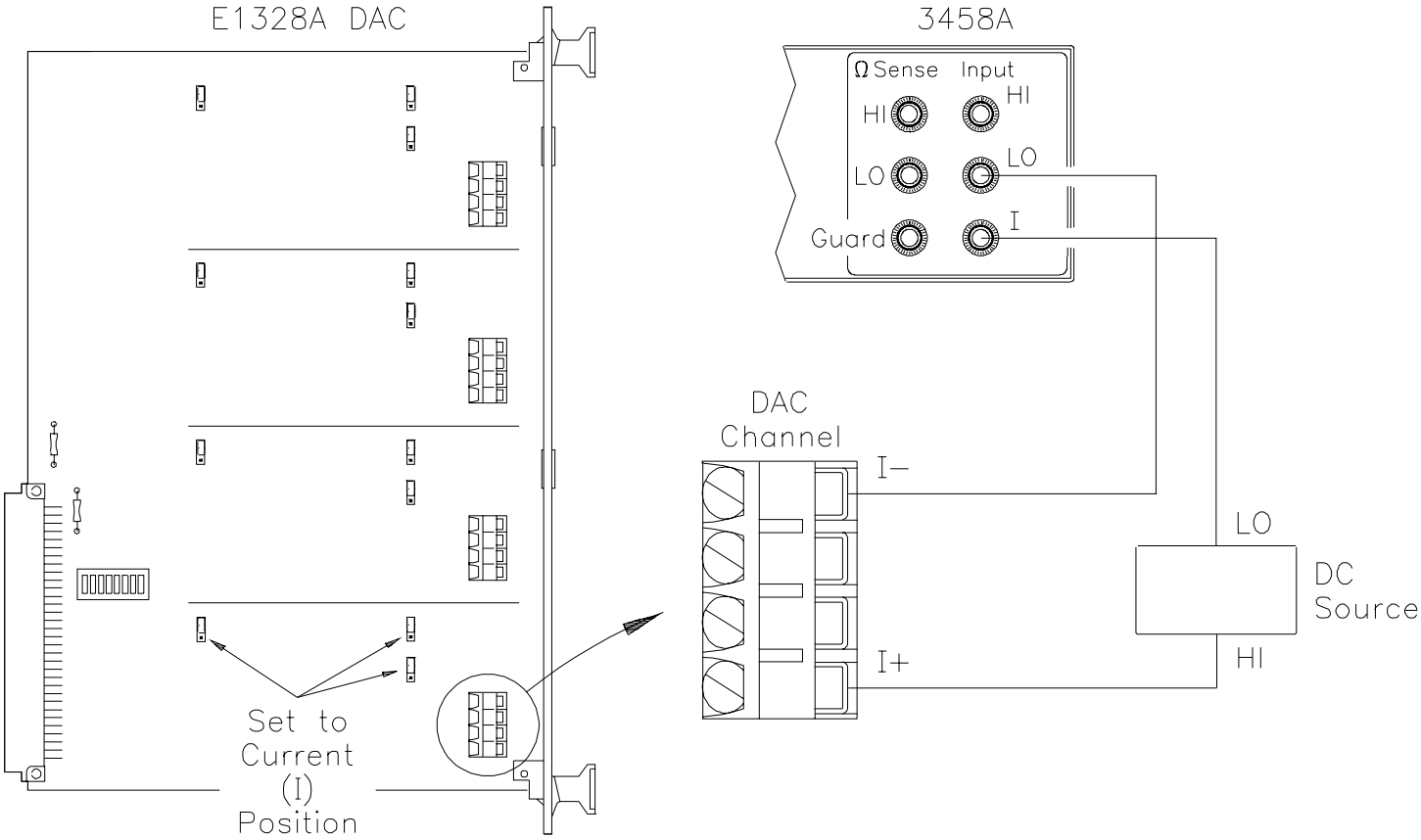

Figure 4-2. Current Compliance Test Connections

Test Procedure (Positive Current Compliance)

1. Set three jumpers on each channel to the I position
2. Connect source and Agilent 3458A to Channel 1 (see Figure 4-2)
3. Set non-cal mode on Channel 1 with CAL1:STAT OFF
4. Set Channel 1 max output (+24 mA) with CURR1 MAX
5. Set DC source to + 12.0V and measure channel output (in mA)
6. Increase DC source output by +0.5V and measure channel output (in mA)
7. Repeat step 6 until channel output is 90% of max (21.6 mA). If the SOURCE voltage is ≥ 13.0V when the output decreases to 90% of max, the test passes.
8. Repeat steps 2 through 7 for Channels 2, 3, and 4. (Use CALchan:STAT OFF and CURRchan MAX.)
9. Remove power and disconnect test equipment

Test Procedure (Negative Current Compliance)

1. Set three jumpers on each channel to the I position
2. Connect source and Agilent 3458A to Channel 1 (see Figure 4-2)
3. Set non-cal mode on Channel 1 with CAL1:STAT OFF
4. Set Channel 1 min current output (-24 mA) with CURR1 MIN
5. Set DC source to -12.0V and measure channel output (in mA)
6. Increase DC source output by -0.5V and measure channel output (in mA)
7. Repeat step 6 until channel output is 90% of min (-21.6 mA). If the SOURCE voltage is ≤ -13.0V when the output decreases to 90% of min, the test passes.
8. Repeat steps 2 through 7 for Channels 2, 3, and 4 (use CAL chan:STAT OFF and CURR chan MIN)

9. Remove power and disconnect test equipment

Example: Positive Current Compliance

This program checks the MEASURED current output from the DAC channel being tested. If the DC SOURCE voltage is ≥ 13.0V when the output current drops to 90% of maximum current, the program generates a "test PASSED" indication. If the DC SOURCE voltage is < 13.0V when the output current drops to 90% of maximum current, the program generates a "test FAILED" indication.

NOTE

To use this program for negative current compliance tests, change the indicated lines as shown:

```
50    OUTPUT 70909;"CURR"&VAL$(Chan)&" MIN"
60    Source = -11.5
90    Source = Source-.5
180  IF Source <= -13.0 THEN Tst$="PASSED"
190  IF Source > -13.0 THEN Tst$ ="FAILED"
```

```
10    ! Current Compliance Tests
20    !
30    FOR Chan = 1 TO 4
40     OUTPUT 70909;"CAL"&VAL$(Chan)&":STAT OFF"
50     OUTPUT 70909;"CURR"&VAL$(Chan)&" MAX"
60     Source = 11.5
70     REPEAT
80       PRINT TABXY(1,1),"Current Compliance Tests on Channel";Chan
90      Source = Source + .5
100     PRINT TABXY(4,10),"Set DC source to ";Source;"Volts DC "
110     PRINT TABXY(4,11),"Measure channel output (in mA)"
120     INPUT " Enter channel output (in mA) ",Value
130     Result = ABS(100*Value/24.0)
140     PRINT TABXY(4,5),"DC Source value = ";Source;"VDC "
150     PRINT TABXY(4,6),"Channel";Chan;"output = ";Value;"mA"
160     PRINT TABXY(4,7),"Output = ";Result;"% of max value "
170   UNTIL Result <= 90.0
180   IF Source  >= 13.0 THEN Tst$ = "PASSED"
190   IF Source < 13.0 THEN Tst$ = "FAILED"
200   CLEAR SCREEN
210   PRINT TABXY(4,14),"DC Source value for output 90% of max =
";Source;"VDC"
220   PRINT TABXY(4,15),"Test ";Tst$;" for Channel";Chan
230  NEXT Chan
240  END
```

Operation Verification Tests

Operation verification tests objectives are to instill a high degree of confidence that the Agilent E1328A 4-Channel D/A Converter is meeting selected specifications from those listed in *Appendix A - Specifications* in the *Agilent E1328A User's Manual*.

Operation verification tests can be used in applications such as incoming inspection and after Agilent E1328A repair. To perform operation verification tests, do the parts of the performance verification tests shown in Table 4-1. See Performance Verification Tests for details on the test procedures.

NOTE

For best results, perform an ACAL on the Agilent 3458A multimeter not more than 24 hours prior to performing the operation verification tests.

If the operation verification test FAILS on any channel, you may want to perform the Voltage Adjustment and/or Current Adjustment procedures in Chapter 5 - Adjustments and then rerun the operation verification tests.

Table 4-1. Agilent E1328A DAC Operation Verification Tests

For this test:	Make these measurements:
Voltage Accuracy	-10V, 0V, +10V
Current Accuracy	-20 mA, 0 mA, +20 mA

Performance Verification Tests

Performance verification tests objectives are to instill a high degree of confidence that the Agilent E1328A 4-Channel D/A Converter (DAC) is meeting the specifications listed in *Appendix A - Specifications* of the *Agilent E1328A User's Manual*. Performance verification tests are required whenever a calibration is required. The Agilent E1328A DAC performance verification tests are:

- Voltage Accuracy Measurements
- Current Accuracy Measurements

NOTE

For best results you should ACAL the Agilent 3458A multimeter not more than 24 hours prior to the tests. If a DAC channel does not pass the performance tests, you may want to do the Voltage Adjustment and/or Current Adjustment (see Chapter 5 - Adjustments) and then rerun the performance verification tests.

Voltage Accuracy Measurements Test

This test checks voltage output accuracy on Channels 1, 2, 3, and 4 of the DAC. The voltage output levels checked are: -10V, -8V, -5V, -2V, 0V, +2V, +5V, +8V, and +10V.

Equipment setup

Connect the equipment as shown in Figure 4-3. Be sure the three jumpers in each DAC channel are set to the V (voltage) position. Then, set the Agilent 3458A to DCV function and set NPLC 100.

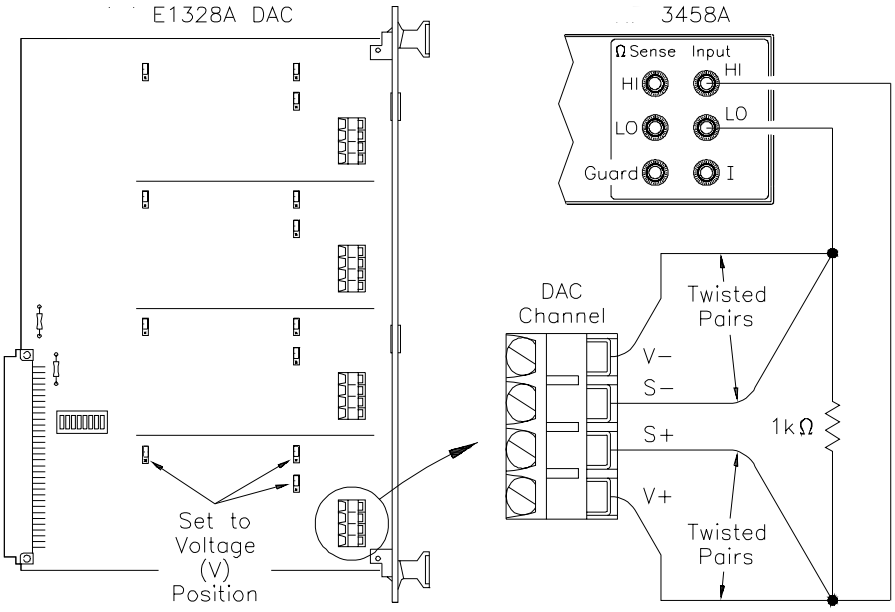

Figure 4-3. Voltage Accuracy Measurements Connections

NOTE

The value of 1 kΩ in Figure 4-3 is the factory value used for original measurements. If you previously calibrated your DAC with a different resistance value, use that resistance value rather than 1 kΩ .

Test Procedure

1. Set three jumpers on each channel to the V position

2. Connect Agilent 3458A and 1 kΩ resistor to Channel 1 (see Figure 4-3)

3. Set Agilent E1328A DAC to default with *RST

4. Set Channel 1 to calibrated mode with CAL1:STAT ON

5. Output -10V on Channel 1 with VOLT1 -10.0000

6. Measure Channel 1 output voltage with Agilent 3458A and compare with limits in Table 4-2

7. Repeat steps 5 and 6 for -8V, -5V, -2V, 0V, +2V, +5V, +8V, and +10V

8. Repeat steps 2 through 7 for Channels 2, 3, and 4 (use CALchan:STAT ON and VOLTchan value)

9. Remove power and disconnect test equipment

Example: Voltage Accuracy Measurements

This program checks the MEASURED output voltage on each DAC channel and compares the result with the 1-year accuracy specifications for the DAC (see *Appendix A - Calculating D/A Converter Accuracy* for a discussion of DAC accuracy).

```
10    ! Voltage Accuracy Measurements Test
20    !
30    OPTION BASE 1
40    DIM Volts(4,9)
50    DATA -10,-8,-5,-2,0,2,5,8,10
60    DATA -10,-8,-5,-2,0,2,5,8,10
70    DATA -10,-8,-5,-2,0,2,5,8,10
80    DATA -10,-8,-5,-2,0,2,5,8,10
90    READ Volts(*)
100   OUTPUT 70909;"*RST"
110   FOR Chan = 1 TO 4
120     FOR I = 1 TO 9
130       OUTPUT 70909;"VOLT"&VAL$(Chan)&" ";Volts(Chan,I)
140       PRINT TABXY(1,2),"Voltage Accuracy Measurements on Channel
";Chan
```

```
150      PRINT TABXY(1,10),"New voltage output on Channel";Chan;" =
":Volts(Chan,I);"V "
160      PRINT
170      INPUT " Enter MEASURED voltage value (in V) ",Meas(Chan,I)
180      GOSUB Accuracy
190 Accuracy: !
200      Acc(Chan,I) = .0035*ABS(Volts(Chan,I)) + .11334
210      Llim(Chan,I) = Volts(Chan,I) - Acc(Chan,I)
220      Ulim(Chan,I) = Volts(Chan,I) + Acc(Chan,I)
230       IF Meas(Chan,I) < Llim(Chan,I) OR Meas(Chan,I) > Ulim(Chan,I)
THEN
240        PRINT TABXY(1,9),"Test FAILED on Channel";Chan;"for
";Volts(Chan,I);"V"
250      ELSE
260        PRINT TABXY(1,9),"Test PASSED on Channel";Chan;"for
";Volts(Chan,I);"V "
270      END IF
280    NEXT I
290   NEXT Chan
300   PRINT TABXY(1,18) ,"Voltage Accuracy Tests Complete"
310   END
```

Counter Accuracy Measurements Test

This test checks current output accuracy on Channels 1, 2, 3, and 4 of the DAC. The current output levels checked are: -20 mA, -16 mA, -10 mA, -4 mA, 0 mA, 4 mA, 10 mA, 16 mA, and 20 mA.

Equipment Setup

Connect the equipment as shown in Figure 4-4. Be sure the three jumpers in each DAC channel are set to the I (current) position. Then, set the Agilent 3458A to DCI function and set NPLC 100.

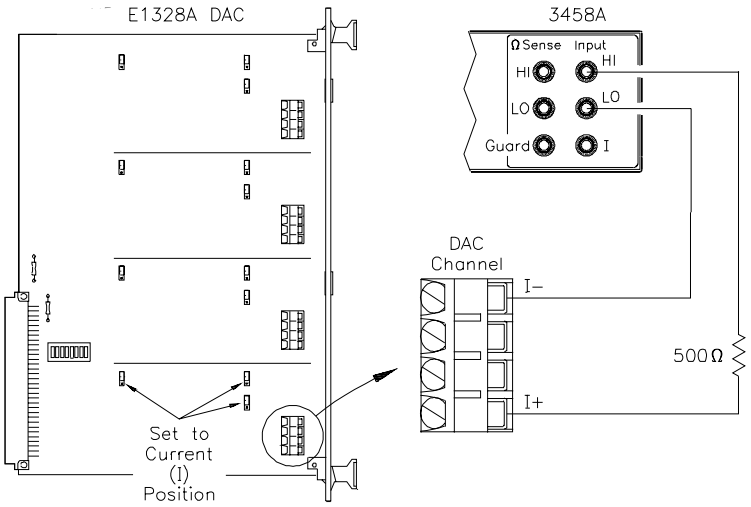

Figure 4-4. Current Measurement Accuracy Connections

NOTE

The value of 500 Ω in Figure 4-4 is the factory value used for original measurements. If you previously calibrated your DAC with a different resistance value, use that resistance value rather than 500 Ω .

Test Procedure

1. Set three jumpers on each channel to the I position

2. Connect Agilent 3458A and 500 Ω resistor to Channel 1 (see Figure 4-4)

3. Set Agilent E1328A DAC to default with *RST

4. Set Channel 1 to calibrated mode with CAL1:STAT ON

5. Output -20 mA on Channel 1 with CURR1 -.02000

6. Measure Channel 1 output current with Agilent 3458A and compare with limits in Table 4-2

7. Repeat steps 5 and 6 for -16 mA, -10 mA, -4 mA, 0 mA, 4 mA, 10 mA., 16 mA, and 20 mA

8. Repeat steps 2 through 7 for Channels 2, 3, and 4 (use CALchan: STAT ON and CURRchan value)

9. Remove power and disconnect test equipment

Example: Current Accuracy Measurements

This program checks the MEASURED output current on each DAC channel and compares the result with the 1-year accuracy specifications for the DAC (See *Appendix A - Calculating D/A Converter Accuracy* for a discussion of DAC accuracy).

```
10    ! Current Accuracy Measurements Test
20    !
30    OPTION BASE 1
40    DIM Amps(4,9)
50    DATA -.02,-.016,-.01,-.004,0,.004,.01,.016,.02
60    DATA -.02,-.016,-.01,-.004,0,.004,.01,.016,.02
70    DATA -.02,-.016,-.01,-.004,0,.004,.01,.016,.02
80    DATA -.02,-.016,-.01,-.004,0,.004,.01,.016,.02
90    READ Amps(*)
100   OUTPUT 70909;"*RST"
110   FOR Chan = 1 TO 4
120     FOR I=1 TO 9
130       OUTPUT 70909;"CURR"&VAL$(Chan)&" ";Amps(Chan,I)
140       PRINT TABXY(1,2)," Current Accuracy Measurements on Channel
";Chan
```

```
150      PRINT TABXY(1,10),"New current output on Channel";Chan;" =
";Amps(Chan,I)*1.E + 3;"mA "
160      INPUT " Enter MEASURED current value (in mA) ",Meas(Chan,I)
170     GOSUB Accuracy
180 Accuracy: !
190      Acc(Chan,I) = .0035*ABS(Amps(Chan,I)) + 2.2665E-4
200      Llim(Chan,I) = Amps(Chan,I) - Acc(Chan,I)
210      Ulim(Chan,I) = Amps(Chan,I) + Acc(Chan,I)
220      IF Meas(Chan,I)*1.E-3 < (Chan,I) OR Meas(Chan,I)*1.E-3 >
Ulim(Chan,I) THEN
230        PRINT TABXY(1,9),"Test FAILED on Channel";Chan;"for
";Amps(Chan,I)*1.E + 3;"mA "
240      ELSE
250        PRINT TABXY(1,9),"Test PASSED on Channel";Chan;"for
";Amps(Chan,I)*1.E + 3;"mA "
260      END IF
270    NEXT I
280   NEXT Chan
290   PRINT TABXY(1,18),"Current Accuracy Tests Complete"
300   END
```

Performance Test Record

Table 4-2, *Performance Test Record for the Agilent E1328A DAC*, can be used to record the results of each Operation Verification and Performance Verification test for the Agilent E1328A DAC (this record can be copied if desired). The record includes the DAC upper and lower limits, Agilent 3458A measurement uncertainty, and the Test Accuracy Ratio (TAR) for the test.

The values for DAC accuracy, Agilent 3458A measurement uncertainty and TAR in Table 4-2 assume the following conditions. If your test conditions differ from these conditions, you will need to compute the appropriate values.

- Calibration ON state (CALx:STAT ON) for each channel
- 1 kΩ load for voltage accuracy measurements
- 500 Ω load for current accuracy measurements

- Test temp ASSUMED to be ± 5° C different than cal temp
- 1-year specifications for DAC accuracy
- 1-year specifications for Agilent 3458A meas uncertainty

NOTE

For the conditions listed, all Test Accuracy Ratios (TARs) exceed 4:1

Table 4-2. Performance Test Record for the Agilent E1328A DAC (Page 1 of 3)

Test Facility:

Name _____ Report No. _____

Address _____ Date _____

City/State _____ Customer _____

Phone _____ Tested by _____

Special Notes:

_____

_____

_____

_____

_____

_____

Test Equipment Record

Model _____ Report No. _____ Date _____

Test Equipment Used: Description	Model No.	Trace No.	Cal Due Date
1. _____	_____	_____	_____
2. _____	_____	_____	_____
3. _____	_____	_____	_____
4. _____	_____	_____	_____
5. _____	_____	_____	_____
6. _____	_____	_____	_____
7. _____	_____	_____	_____

Table 4-2. Performance Test Record for the Agilent E1328A DAC (Page 2 of 3)

Voltage Accuracy Measurements*

Ch	Output Value (V)	Low Limit (V)	Measured Value (V)	High Limit (V)	Measurement Uncertainty (μV)	Test Acc Ratio (TAR)
1	-10.00000	-10.14833	_____	-9.85167	103.60	>10:1
1	-8.00000	-8.14134	_____	-7.85867	83.30	>10:1
1	-5.00000	-5.13084	_____	-4.86916	52.85	>10:1
1	-2.00000	-2.12033	_____	-1.87967	22.40	>10:1
1	0.00000	-.11334	_____	+.11334	2.10	>10:1
1	+2.00000	+1.87967	_____	+2.12033	22.40	>10:1
1	+5.00000	+4.86916	_____	+5.13084	52.85	>10:1
1	+8.00000	+7.85867	_____	+8.14134	83.30	>10:1
1	+10.00000	+9.85167	_____	+10.14833	103.60	>10:1
2	-10.00000	-10.14833	_____	-9.85167	103.60	>10:1
2	-8.00000	-8.14134	_____	-7.85867	83.30	>10:1
2	-5.00000	-5.13084	_____	-4.86916	52.85	>10:1
2	-2.00000	-2.12033	_____	-1.87967	22.40	>10:1
2	0.00000	-.11334	_____	+.11334	2.10	>10:1
2	+2.00000	+1.87967	_____	+2.12033	22.40	>10:1
2	+5.00000	+4.86916	_____	+5.13084	52.85	>10:1
2	+8.00000	+7.85867	_____	+8.14134	83.30	>10:1
2	+10.00000	+9.85167	_____	+10.14833	103.60	>10:1
3	-10.00000	-10.14833	_____	-9.85167	103.60	>10:1
3	-8.00000	-8.14134	_____	-7.85867	83.30	>10:1
3	-5.00000	-5.13084	_____	-4.86916	52.85	>10:1
3	-2.00000	-2.12033	_____	-1.87967	22.40	>10:1
3	0.00000	-.11334	_____	+.11334	2.10	>10:1
3	+2.00000	+1.87967	_____	+2.12033	22.40	>10:1
3	+5.00000	+4.86916	_____	+5.13084	52.85	>10:1
3	+8.00000	+7.85867	_____	+8.14134	83.30	>10:1
3	+10.00000	+9.85167	_____	+10.14833	103.60	>10:1
4	-10.00000	-10.14833	_____	-9.85167	103.60	>10:1
4	-8.00000	-8.14134	_____	-7.85867	83.30	>10:1
4	-5.00000	-5.13084	_____	-4.86916	52.85	>10:1
4	-2.00000	-2.12033	_____	-1.87967	22.40	>10:1
4	0.00000	-.11334	_____	+.11334	2.10	>10:1
4	+2.00000	+1.87967	_____	+2.12033	22.40	>10:1
4	+5.00000	+4.86916	_____	+5.13084	52.85	>10:1
4	+8.00000	+7.85867	_____	+8.14134	83.30	>10:1
4	+10.00000	+9.85167	_____	+10.14833	103.60	>10:1

* 1-year DAC and Agilent 3458A specifications
±5°C temp difference from cal temperature
Agilent 3458A ACAL within previous 24-hours

Table 4-2. Performance Test Record for the Agilent E1328A DAC (Page 3 of 3)

Current Accuracy Measurements*

Ch	Output Value (mA)	Low Limit (mA)	Measured Value (mA)	High Limit (mA)	Meas Uncert (μA)	Test Acc Ratio (TAR)
1	-20.00000	-20.29665	_____	-19.70335	1.440	>10:1
1	-16.00000	-16.28265	_____	-15.71735	1.272	>10:1
1	-10.00000	-10.26165	_____	-9.73835	.330	>10:1
1	-4.00000	-4.24065	_____	-3.75935	.168	>10:1
1	0.00000	-.22665	_____	+.22665	.060	>10:1
1	+4.00000	+3.75935	_____	+4.24065	.168	>10:1
1	+10.00000	+9.73835	_____	+10.26165	.330	>10:1
1	+16.00000	+15.71735	_____	+16.28265	1.272	>10:1
1	+20.00000	+19.70335	_____	+20.29665	1.440	>10:1
2	-20.00000	-20.29665	_____	-19.70335	1.440	>10:1
2	-16.00000	-16.28265	_____	-15.71735	1.272	>10:1
2	-10.00000	-10.26165	_____	-9.73835	.330	>10:1
2	-4.00000	-4.24065	_____	-3.75935	.168	>10:1
2	0.00000	-.22665	_____	+.22665	.060	>10:1
2	+4.00000	+3.75935	_____	+4.24065	.168	>10:1
2	+10.00000	+9.73835	_____	+10.26165	.330	>10:1
2	+16.00000	+15.71735	_____	+16.28265	1.272	>10:1
2	+20.00000	+19.70335	_____	+20.29665	1.440	>10:1
3	-20.00000	-20.29665	_____	-19.70335	1.440	>10:1
3	-16.00000	-16.28265	_____	-15.71735	1.272	>10:1
3	-10.00000	-10.26165	_____	-9.73835	.330	>10:1
3	-4.00000	-4.24065	_____	-3.75935	.168	>10:1
3	0.00000	-.22665	_____	+.22665	.060	>10:1
3	+4.00000	+3.75935	_____	+4.24065	.168	>10:1
3	+10.00000	+9.73835	_____	+10.26165	.330	>10:1
3	+16.00000	+15.71735	_____	+16.28265	1.272	>10:1
3	+20.00000	+19.70335	_____	+20.29665	1.440	>10:1
4	-20.00000	-20.29665	_____	-19.70335	1.440	>10:1
4	-16.00000	-16.28265	_____	-15.71735	1.272	>10:1
4	-10.00000	-10.26165	_____	-9.73835	.330	>10:1
4	-4.00000	-4.24065	_____	-3.75935	.168	>10:1
4	0.00000	-.22665	_____	+.22665	.060	>10:1
4	+4.00000	+3.75935	_____	+4.24065	.168	>10:1
4	+10.00000	+9.73835	_____	+10.26165	.330	>10:1
4	+16.00000	+15.71735	_____	+16.28265	1.272	>10:1
4	+20.00000	+19.70335	_____	+20.29665	1.440	>10:1

* 1-year DAC and Agilent 3458A specifications
±5°C temp difference from cal temperature
Agilent 3458A ACAL within previous 24-hours

Chapter 5
Adjustments

Introduction

This chapter contains procedures to adjust the Agilent E1328A D/A Converter (DAC), including voltage adjustments and current adjustments.

The DAC should be adjusted after repair to ensure peak performance. Equipment required for the adjustment procedures is listed in Table 1-2, *Recommended Test Equipment*.

Before performing adjustments, the DAC must have a minimum 60-minute warm up and the line voltage must be 115/230 Vac ± 10%. For best accuracy, the test area temperature should be between 18°C and 28°C, and stable to ± 1°C.

WARNING

Do not perform any of the following adjustments unless you are a qualified, service trained person and have read the WARNINGS and CAUTIONS in Chapter 1.

Voltage Adjustments

This adjustment is used to update the stored voltage constants for each DAC channel, and should be perfomed:

- On initial setup
- Periodically (24 hours or 90 days) to maintain specified output accuracy (see *Appendix A - Specifications* of the *Agilent E1328A User's Manual*)
- When temperature has changed more than ± 5°C from last adjustment temperature
- When the type of load is changed
- Any time accuracy is in doubt

NOTE

For best measurement accuracy, perform an Agilent 3458A multimeter ACAL not more than 24 hours prior to these adjustments. Each DAC channel to be adjusted MUST be in the non-calibrated mode (CALx:STAT OFF), or errors in the adjustment constants will occur.

Equipment Setup

Connect a 1 kΩ resistor and Agilent 3458A multimeter to the channel to be adjusted, as shown in figure 5-1. Be sure to set all three channel jumpers to the V (voltage) position. Set the Agilent 3458A to DCV function and set NPLC 100.

NOTE

The value of 1 kΩ in Figure 5-1 is the factory value used for original adjustments. If you previously adjusted your DAC with a different resistance value, use that resistance value rather than 1 kΩ .

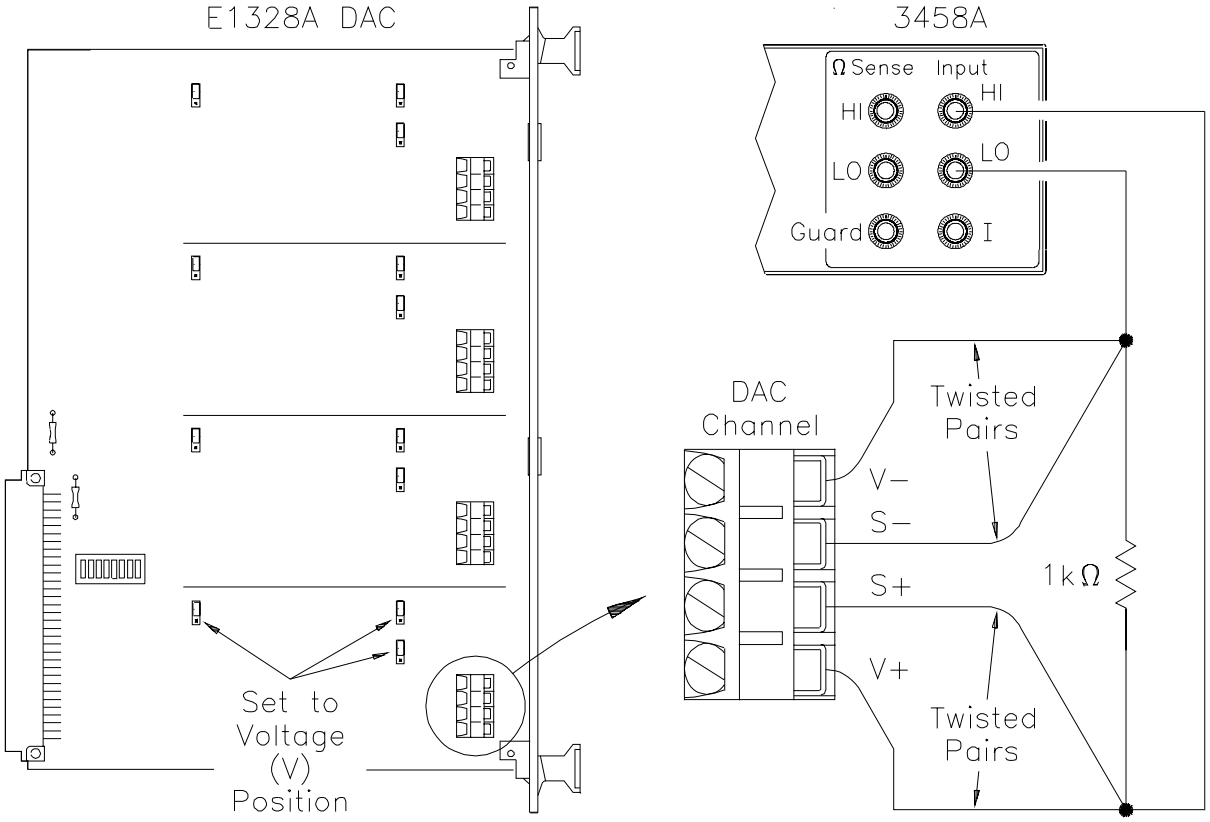

Figure 5-5. Voltage Adjustment Connections

Adjustment Procedures

1. Set three jumpers on Channel 1 to the V position.
2. Connect a 1 kΩ resistor and Agilent 3458A to Channel 1 (see Figure 5-1).
3. Set Channel 1 to non-calibrated mode with CAL1:STAT OFF.
4. Set Channel 1 to minimum output (-12V) with VOLT1 MIN. Measure and record to 5 1/2 digits the actual output voltage.
5. Set Channel 1 to default output (0V) with VOLT1 DEF. Measure and record to 5 1/2 digits the actual output voltage.
6. Set Channel 1 to maximum output (+12V) with VOLT1 MAX. Measure and record to 5 1/2 digits the actual output voltage.
7. Enter recorded minimum, default, and maximum values with CAL1:VOLT min,def,max. The adjustment constants are automatically updated and stored.
8. Repeat steps 1 through 7 for channels 2, 3, and 4 as desired (use CALchan:STAT OFF, VOLTchan value, and CALchan:VOLT values).
9. Remove power and disconnect power equipment.

Example: Voltage Adjustments

This program uses the measured minimum, default, and maximum values you enter to update the voltage adjustment constants for Channels 1, 2, 3, and 4.

```
10   ! Voltage Adjustments
20   !
30   DISP CHR$(129)
40   FOR Chan= 1 TO 4
50    PRINT TABXY(1,1),"Voltage Adjustments on Channel";Chan
60    OUTPUT 70909;"CAL"&VAL$(Chan)&":STAT OFF"
70    OUTPUT 70909;"VOLT"&VAL$(Chan)&" MIN"
80    PRINT TABXY(1,18),"Channel";Chan;"is set to minimum (-12V)"
90    INPUT "Enter measured value (in V to 5.5 digits) ",Min
100   OUTPUT 70909;"VOLT"&VAL$(Chan)&" DEF"
110   PRINT TABXY(1,18),"Channel";Chan;"is set to default (0V) "
120   INPUT "Enter measured value (in V to 5.5 digits) ",Def
130   OUTPUT 70909;"VOLT"&VAL$(Chan)&" MAX"
140   PRINT TABXY(1,18),"Channel";Chan;"is set to maximum (+12V)"
150   INPUT "Enter measured value (in V to 5.5 digits) ",Max
160   OUTPUT 70909;"CAL"&VAL$(Chan)&":VOLT ";Min,Def,Max
170  NEXT Chan
180  CLEAR SCREEN
190  PRINT "Voltage Adjustments Complete"
200  END
```

Current Adjustments

This adjustment is used to update the stored current constants for each DAC channel, and should be performed:

- On initial setup
- Periodically (24 hours or 90 days) to maintain specified output accuracy (see *Appendix A - Specifications* of the *Agilent E1328A User's Manual*)
- When temperature has changed more than ± 5°C from last adjustment temperature
- When the type of load is changed
- Any time accuracy is in doubt

NOTE

For best measurement accuracy, perform an Agilent 3458A multimeter ACAL not more than 24 hours prior to these adjustments. Each DAC channel to be adjusted MUST be in the non-calibrated mode (CALx:STAT OFF), or errors in the adjustment constants will occur.

Equipment Setup

Connect the Agilent 3458A multimeter and a 500 Ω resistor to the channel to be adjusted, as shown in Figure 5-2. Be sure to set all three channel jumpers to the I (current) position. Set the Agilent 3458A to DCI function and set NPLC 100.

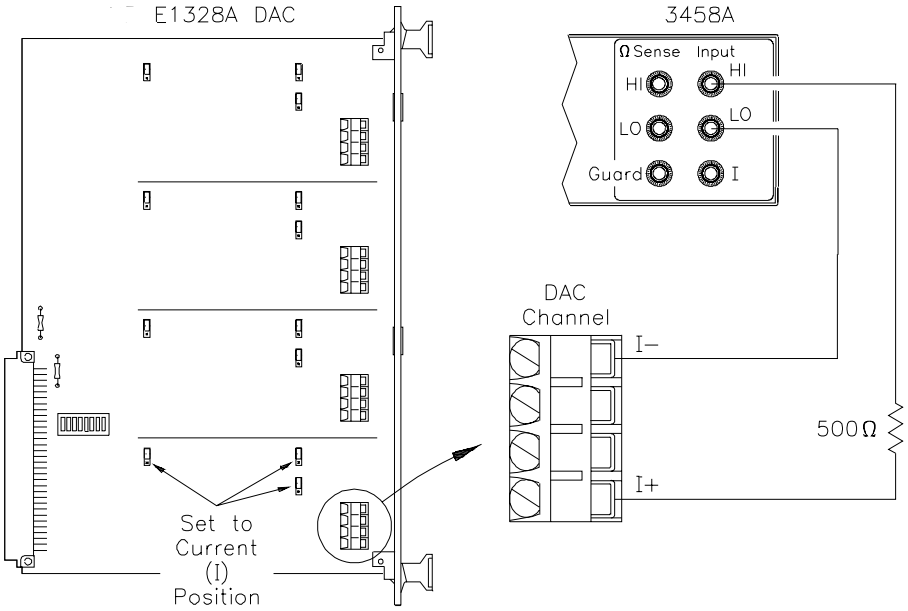

Figure 5-6. Current Adjustment Connections

NOTE

The value of 500 Ω in Figure 5-2 is the factory value used for original adjustments. If you previously adjusted your DAC with a different resistance value, use that resistance value rather than 500 Ω .

Adjustment Procedures

1. Set three jumpers on Channel 1 to the I position.
2. Connect a 500 Ω resistor and Agilent 3458A to Channel 1 (see Figure 5-2).
3. Set Channel 1 to non-calibrated mode with CAL1:STAT OFF.
4. Set Channel 1 to minimum output (-.024 A) with CURR1 MIN. Measure and record to 5 1/2 digits the actual output current (in Amps).
5. Set Channel 1 to default output (0 A) with CURR1 DEF. Measure and record to 5 1/2 digits the actual output current (in Amps).
6. Set Channel 1 to maximum output (+.024 A) with CURR1 MAX. Measure and record to 5 1/2 digits the actual output current (in Amps).
7. Enter recorded minimum, default, and maximum values with CAL1:CURR min,def,max. The adjustment constants are automatically updated and stored.
8. Repeat steps 1 through 7 for channels 2, 3, and 4 as desired (use CALchan:STAT OFF, CURRchan value, and CALchan:CURR values).
9. Remove power and disconnect power equipment.

Example: Current Adjustments

This program uses the measured minimum, default, and maximum values you enter to update the current adjustment constants for Channels 1, 2, 3, and 4.

```
10   ! Current Adjustments
20   !
30   DISP CHR$(129)
40   FOR Chan= 1 TO 4
50    PRINT TABXY(1,1),"Current Adjustments on Channel";Chan
60    OUTPUT 70909;"CAL"&VAL$(Chan)&":STAT OFF"
70    OUTPUT 70909;"CURR"&VAL$(Chan)&" MIN"
80    PRINT TABXY(1,18),"Channel";Chan;"is set to minimum (-.024 A)"
90    INPUT "Enter measured value (in A to 5.5 digits) ",Min
100   OUTPUT 70909;"CURR"&VAL$(Chan)&" DEF"
110   PRINT TABXY(1,18),"Channel";Chan;"is set to default (0 A) "
120   INPUT "Enter measured value (in A to 5.5 digits) ",Def
130   OUTPUT 70909;"CURR"&VAL$(Chan)&" MAX"
140   PRINT TABXY(1,18),"Channel";Chan;"is set to maximum (+.024 A)"
150   INPUT "Enter measured value (in A to 5.5 digits) ",Max
```

```
160   OUTPUT 70909;"CAL"&VAL$(Chan)&":CURR ";Min,Def,Max
170  NEXT Chan
180  CLEAR SCREEN
190  PRINT "Current Adjustments Complete"
200  END
```

Chapter 6
Replaceable Parts

Introduction

This chapter contains information to order replaceable parts for the Agilent E1328A D/A Converter.

Exchange Assemblies

Table 6-1 lists assemblies that may be replaced on an exchange basis (EXCHANGE ASSEMBLIES). Exchange, factory-repaired, and tested assemblies are available only on a trade-in basis. Defective assemblies must be returned for credit. Assemblies required for spare parts stock must be ordered by the new assembly part number. Contact your nearest Agilent Technologies Sales and Service Office for details.

Ordering Information

To order a part listed in Table 6-1, specify the Agilent Technologies part number and the quantity required. Send the order to your nearest Agilent Technologies Sales and Service Office.

Replaceable Parts List

Table 6-1, *Agilent E1328A Replaceable Parts*, lists the replaceable parts for the Agilent E1328A D/A Converter. See Figure 6-1 (page 6-4) for locations of parts listed in Table 6-1.

Table 6-1. Agilent E1328A Replaceable Parts

Reference* Designator	Agilent Part Number	Qty	Description	Mfr** Code	Mfr Part Number
			EXCHANGE ASSEMBLIES		
	E1328-66201	1	4-CHAN D/A CONVERTER (NEW)	28480	E1328-66201
	E1328-69201	1	4-CHAN D/A CONVERTER (EXCH)	28480	E1328-69201
A1	E1328-66501	1	**PRINTED CIRCUIT ASSY [a]**	28480	E1328-66501
A1BRK1	0500-2183	2	BRACKET-RIGHT ANGLE,MTG;PNL-PCB	28480	0050-2183
	0361-1295	2	RIVET-SEMITUBULAR .095 DIA .406 LNG	00000	ORDER BY DESCRIP
A1BRK2	0500-2183		BRACKET-RIGHT ANGLE,MTG;PNL-PCB	28480	0050-2183
	0361-1295		RIVET-SEMITUBULAR .095 DIA .406 LNG	00000	ORDER BY DESCRIP
A1F1-2	2110-0712	2	FUSE-SUBMINIATURE 4A 125V NTD AX	75915	R251004T1
A1J101	1251-4682	12	CONN-POST TYPE-.100-PIN-SPCG 3-CONT	26742	1102-1-103-02
A1J102	1251-4682		CONN-POST TYPE-.100-PIN-SPCG 3-CONT	26742	1102-1-103-02
A1J103	1251-4682		CONN-POST TYPE-.100-PIN-SPCG 3-CONT	26742	1102-1-103-02
A1J201	1251-4682		CONN-POST TYPE-.100-PIN-SPCG 3-CONT	26742	1102-1-103-02
A1J202	1251-4682		CONN-POST TYPE-.100-PIN-SPCG 3-CONT	26742	1102-1-103-02
A1J203	1251-4682		CONN-POST TYPE-.100-PIN-SPCG 3-CONT	26742	1102-1-103-02
A1J301	1251-4682		CONN-POST TYPE-.100-PIN-SPCG 3-CONT	26742	1102-1-103-02
A1J302	1251-4682		CONN-POST TYPE-.100-PIN-SPCG 3-CONT	26742	1102-1-103-02
A1J303	1251-4682		CONN-POST TYPE-.100-PIN-SPCG 3-CONT	26742	1102-1-103-02
A1J401	1251-4682		CONN-POST TYPE-.100-PIN-SPCG 3-CONT	26742	1102-1-103-02
A1J402	1251-4682		CONN-POST TYPE-.100-PIN-SPCG 3-CONT	26742	1102-1-103-02
A1J403	1251-4682		CONN-POST TYPE-.100-PIN-SPCG 3-CONT	26742	1102-1-103-02
A1P1	1252-1596	1	CONN-POST-TYPE;2.54-PIN-SPCG96-CONT	06776	DIN-96CPC-SRI-TR
	0361-1294	2	RIVET-SEMITUBULAR .095 DIA .328 LNG	00000	ORDER BY DESCRIP
A1SW1	3101-3066	1	SWITCH-DIP RKR SPST 0.1A 5VDC	81073	76YY22968S
A1TB1	0360-2390	4	TERMINAL BLOCK 4POS. SCREW TYPE	28480	0360-2390
A1TB2	0360-2390		TERMINAL BLOCK 4POS. SCREW TYPE	28480	0360-2390
A1TB3	0360-2390		TERMINAL BLOCK 4POS. SCREW TYPE	28480	0360-2390
A1TB4	0360-2390		TERMINAL BLOCK 4POS. SCREW TYPE	28480	0360-2390
			MECHANICAL PARTS		
MP1	E1300-45101†	1	HNDL-KIT TOP, Agilent	28480	E1300-45101
MP2	E1300-45102†	1	HNDL-KIT BTM, VXI	28480	E1300-45102
PNL1	E1328-00202†	1	PNL-RR 4 CH DAC	28480	E1328-00202
SCR1-SCR2	0515-1968	2	SCR-THD-RLG M2.5 X0.45 14mm	28480	0515-1968
SCR3-SCR4	0515-2140	2	SCR	28480	0515-2140
SCR5-SCR6	0515-2743	2	SCR-FH M2.5 X 8 THREAD ROLLING	28480	0515-2743
SHD1	E1300-80601	1	SHIELD SAFETY	28480	E1300-80601
MNL1	E1328-90004	1	MNL-USERS E1328A	28480	E1328-90004

* See Table 6-2 for Reference Designator definitions.
** See Table 6-3 for Code List of Manufacturers
[a] Repair limited to replacement of parts listed - see Introduction for ordering information
† These parts are not compatible with older version fixed handles or their corresponding front panels. To replace one or more of these old parts, you must order all three new parts (Top and Bottom Handle Kits AND External Panel).

Table 6-2. Agilent E1328A Reference Designators

Agilent E1328A Reference Designators	
A ..... assembly	P ..... electrical connector (plug)
BRK ..... bracket	PNL ..... panel
F ..... fuse	SCR ..... screw
J ..... electrical connector (jack)	SHD ..... shield
MNL ..... manual	SW ..... switch
MP ..... misc. mechanical part	TB ..... terminal block

Table 6-3. Agilent E1328A Code List of Manufacturers

Mfr Code	Manufacturer Name	Address
00000	Any satisfactory supplier	
06776	Robinson Nugent Inc	New Albany, IN US 47150
26742	Methode Electronics, inc	Chicago, IL 60656
28480	Agilent Technologies	Palo Alto, CA US 94304
75915	Littelfuse Inc	Des Plaines, IL US 60016
81073	Grayhill Inc	La Grange, IL US 60525

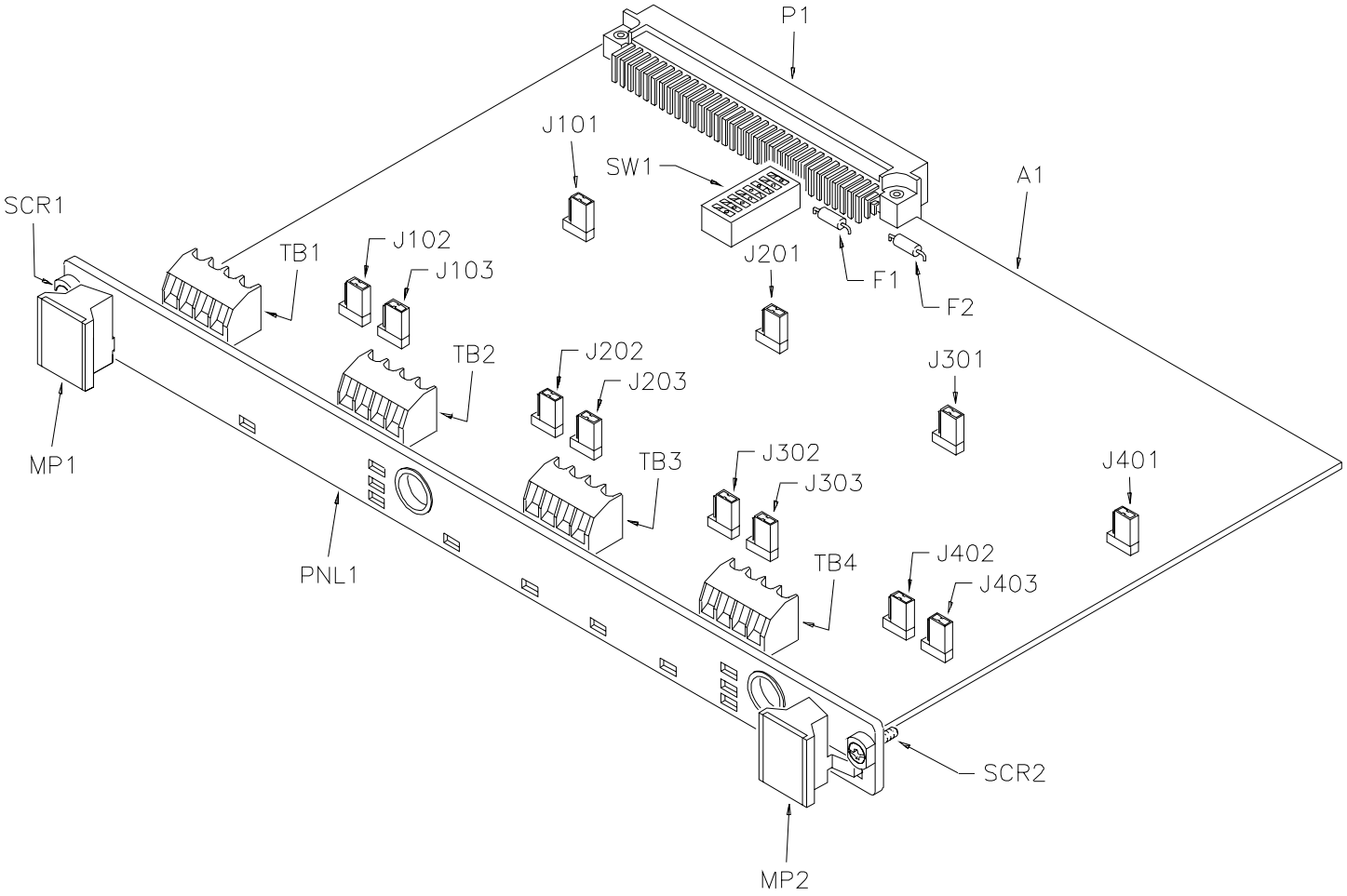

Figure 6-7. Agilent E1328A DAC - Replaceable Parts

Chapter 7
Manual Changes

Introduction

This chapter contains information to adapt this manual to instruments for which the content does not directly apply. Since this manual applies directly to instruments with serial numbers listed on the title page, change information is not required. See *D/A Converter Serial Numbers* in Chapter 1 for Agilent E1328A D/A Converter serial number information.

Chapter 8
Service

Introduction

This chapter contains information to service the Agilent E1328A D/A Converter (DAC), including trouble shooting guidelines and repair/maintenance guidelines.

WARNING

Do not perform any of the service procedures shown unless you are a qualified, service-trained person, and have read the WARNINGS and CAUTIONS in Chapter 1.

Equipment Required

Equipment required for DAC trouble shooting and repair is listed in Table 1-2, *Recommended Test Equipment*. To avoid damage to the screw head slots, use Pozidrive or Torx drivers as required.

Service Aids

Service aids on printed circuit boards include pin numbers, some reference designations, and assembly part numbers. See *Chapter 6 - Replaceable Parts* for descriptions and location of Agilent E1328A replaceable parts.

Service notes, manual updates, and service literature for the Agilent E1328A DAC may be available through Agilent Technologies. For information, contact your nearest Agilent Technologies Sales and Service Office.

Troubleshooting Techniques

There are two main steps to trouble shoot an Agilent E1328A DAC problem: (1) identify the problem, and (2) test the DAC to isolate the cause to a user-replaceable component.

Identifying the Problem

DAC problems can be divided into four general categories:

- Self-test errors
- Operator errors
- Catastrophic failures
- Performance out of specification

Self-Test Errors

An error number (-330) is returned when the DAC self-test fails. If a self-test error occurs, recycle power and repeat the self-test. If the error repeats, see "Testing the DAC" to trouble shoot the DAC.

Operator Errors

Apparent failures may result from operator errors in sending SCPI messages to the DAC. See *Chapter 5 - 4-Channel D/A Converter Command Reference* in the *Agilent E1328A User's Manual* for information on possible SCPI command errors.

Catastrophic Failure

If a catastrophic failure occurs, see "Testing the DAC" to trouble shoot the DAC.

Performance Out of Specification

If the DAC performance is out of specification limits, use the adjustment procedures in *Chapter 5 - Adjustments* to correct the problem.
If the condition repeats, see "Testing the DAC" to trouble shoot the DAC.

Testing the DAC

Table 8-1 lists the error messages associated with the DAC. Based on the error returned from the DAC, you can use the tests and checks in Table 8-2 to isolate the problem to a user replaceable part on the DAC rear panel or to the A1 PCA. See Figure 6-1 in *Chapter 6 - Replaceable Parts* for locations of user-replaceable parts.

NOTE

If the problem cannot be traced to a user-replaceable part listed in Table 6-1, return the counter to Agilent Technologies for exchange. See Chapter 6 - Replaceable Parts for procedures.

Table 8-1. Agilent E1328A DAC Error Messages

No.	Title	Potential Cause(s)
-330 -240 -221	Self-Test Failure Hardware Failure Jumper Settings	Module malfunction Module malfunction Channel's V/I jumper in incorrect position
2801	Channel 1 current checksum error	Channel 1 stored adjustment constant (current) is corrupted
2802	Channel 2 current checksum error	Channel 2 stored adjustment constant (current) is corrupted
2803	Channel 3 current checksum error	Channel 3 stored adjustment constant (current) is corrupted
2804	Channel 4 current checksum error	Channel 4 stored adjustment constant (current) is corrupted
2805	Channel 1 voltage checksum error	Channel 1 stored adjustment constant (voltage) is corrupted
2806	Channel 2 voltage checksum error	Channel 2 stored adjustment constant (voltage) is corrupted
2807	Channel 3 voltage checksum error	Channel 3 stored adjustment constant (voltage) is corrupted
2808	Channel 4 voltage checksum error	Channel 4 stored adjustment constant (voltage) is corrupted

Table 8-2. Agilent E1328A Tests/Checks

Test/Check	Reference Designator	Check:
Heat Damage	- - - - - - - - - -	Discolored PC boards Damaged insulation Evidence of arcing
Switch Setting	SW1	LADDR setting
A1 PCA	F1, F2 J101 - J402 P1 TB1 - TB4	Fuse continuity Mating connector contacts jumper in wrong position Connector contacts

Checking Heat Damage

Inspect the DAC for signs of abnormal internally generated heat such as discolored printed circuit boards or components, damaged insulation, or evidence of arcing. If there is damage, do not operate the DAC until you correct the problem.

Checking Switches/Jumpers

Verify the logical address setting is set correctly (factory set at 72). See the *Agilent E1328A User's Manual* for information.

Testing the A1 Assembly

To test the A1 Assembly, remove mainframe power and remove the DAC from the mainframe. Then, see table 8-2 for guidelines to isolate the problem to a user-replaceable part.

Repair / Maintenance Guidelines

This section gives guidelines to repair and maintain the Agilent E1328A DAC, including:

- ESD precautions
- Soldering printed circuit boards
- Post-repair safety checks

ESD Precautions

Electrostatic discharge (ESD) may damage MOS, CMOS and other static sensitive devices in the Agilent E1328A DAC. This damage can range from slight parameter degradation to catastrophic failure. When handling DAC assemblies, follow these guidelines to avoid damaging DAC components:

- Always use a static-free work station with a pad of conductive rubber or similar material when handling DAC components.
- After you remove the DAC from the mainframe, place the DAC on a conductive surface to guard against ESD damage.
- Do not use pliers to remove a MOS or CMOS device from a high-grip socket. Instead, use a small screwdriver to pry the device up from one end. Slowly lift the device up, one pair of pins at a time.

- After you remove a MOS or CMOS device from an assembly, place the device onto a pad of conductive foam or other suitable holding material.
- If a device requires soldering, be sure the assembly is placed on a pad of conductive material. Also, be sure you, the pad, and the soldering iron tip are grounded to the assembly. Apply as little heat as possible when soldering.
- When you replace a MOS or CMOS device, ground the foam to the DAC before removing the device from the foam.

Soldering Printed Circuit Boards

The etched circuit boards in the DAC have plated-through holes that allow a solder path to both sides of the insulating material. Soldering can be done from either side of the board with equally good results. When soldering to any circuit board, keep in mind the following guidelines.

CAUTION

Do not use a sharp metal object such as an awl or twist drill, since sharp objects may damage the plated-through conductor.

- Avoid unnecessary component unsoldering and soldering. Excessive replacement can result in damage to the circuit board and/or adjacent components.
- Do not use a high power soldering iron on etched circuit boards (a 38-watt soldering iron is recommended), as excessive heat may lift a conductor or damage the board.
- Use a suction device or wooden toothpick to remove solder from component mounting holes. When using a suction device, be sure the equipment is properly grounded to prevent electrostatic discharge from damaging CMOS devices.

Post-Repair Safety Checks

After making repairs to the Agilent E1328A DAC, inspect the DAC for any signs of abnormal internally generated heat, such as discolored printed circuit boards or components, damaged insulation, or evidence of arcing. Determine and correct the cause of the condition. Then run the self-test (*TST? command) to verify that the DAC is functional.

Appendix A
Calculating D/A Converter Accuracy

Introduction

This appendix shows how D/A Converter (DAC) accuracy, Agilent 3458A multimeter measurement uncertainty, and test accuracy ratio (TAR) values are defined and calculated for the performance verification tests for the Agilent E1328A DAC.

See Table 4-2, "Performance Test Record for the Agilent E1328A DAC" for 1-year specification values for DAC accuracy, 1-year measurement uncertainty values for the Agilent 3458A multimeter, and associated DAC test accuracy ratios (TARs).

NOTE

DAC accuracy, multimeter measurement uncertainty, and test accuracy ratios in Table 4-2 are valid ONLY for the specified test conditions and assumptions described in this manual. For the test conditions described, in TARs exceed 4:1

DAC Accuracy Definition

DAC accuracy is the expected accuracy of the measurement due ONLY to the D/A Converter. The "Low Limit" entry in Table 4-2 is the lower (-) value of DAC accuracy, while the "High Limit" entry is the upper (+) value of DAC accuracy.

Measurement Uncertainty Definition

Measurement Uncertainty is the expected accuracy of the Agilent 3458A multimeter for specified conditions. This value is shown in the "Measurement Uncertainty" column of Table 4-2. See the *Agilent 3458A Multimeter Operating, Programming, and Configuration Manual* for additional information on calculating Agilent 3458A multimeter measurement uncertainty.

Test Accuracy Ratio (TAR) Definition

Test Accuracy Ratio (TAR) is the ratio of DAC accuracy to Agilent 3458A multimeter measurement uncertainty. For the Agilent E1328A DAC performance tests, Test Accuracy Ratio = (High Limit value - Test Output value)/Measurement Uncertainty value. This value is shown in the "Test Accuracy Ratio (TAR)" column of Table 4-2.

DAC Accuracy Calculations

For the Agilent E1328A DAC performance verification tests, accuracy is defined for DC Voltage and DC Current outputs using the 1-year specifications in *Appendix A - Specifications* of the *Agilent E1328A User's Manual.* The assumed test conditions are:

- 1 year since calibration
- At least 1-hour warmup
- Temperature ± 5°C different than calibration temp
- Calibration ON state (CALx:STAT ON) for each channel
- Same load as at calibration

DC Voltage Accuracy Equations

From *Appendix A* of the *Agilent E1328A User's Manual,* **DC Voltage Accuracy (1-year) = Accuracy + Temperature Coefficient** = ± [(.3% of output + 110 mV) + (0.01% output +.667 mV)/°C]. For 1-year specifications and ± 5°C difference from calibration temperature:

DC Voltage Accuracy (in Volts) = ± (.0035 x output + .11334), where output is in Volts.

Example: Calculate DC Voltage Output Accuracy

For a 5.0 V dc output:

DCV Accuracy (1-year) = ± [.0035 x 5.0 + .11334] = ± 0.13084V. Thus, for a 5.0 V output, the Upper Limit value in Table 4-2 = 5.13084 V and the Lower Limit value = 4.86916 V.

DC Current Accuracy Equations

From *Appendix A* of the *Agilent E1328A User's Manual*, D**C Current Accuracy 1-year) = Accuracy + Temperature Coefficient** = ± [(.3% of output + 220 μA) + (.01% of output + 1.33 μA)/°C]. For 1-year specifications and ± 5°C difference from calibration temperature:

DC Current Accuracy (in A) = ± (.0035 x output + 226.65 X 10^{-6}), where output is in Amps.

Example: Calculate DC Current Output Accuracy

For a 10.0 mA dc output, **Accuracy (1-year)** = ± [.0035 x 10.0 x 10^{-3} + 226.65 x 10^{-6}) = ± 0.26165 mA. Thus, for a 10.0 mA output, the Upper

Limit value in Table 4-2 = 10.26165 mA and the Lower Limit value = 9.73835 mA.

Agilent 3458A Measurement Uncertainty Calculations

Measurement uncertainties for the Agilent 3458A multimeter are calculated using the 1-year accuracy specifications in *Appendix A - Specifications* of the *Agilent 3458A Multimeter Operating, Programming, and Configuration Manual*

The **assumed** test conditions are:

- Test within 24 hours of last Agilent 3458A ACAL
- 1 year since last Agilent 3458A calibration
- At least a 1-hour warmup for Agilent 3458A
- (For DCV) 10V fixed range, PRESET, and NPLC 100
- (For DCI) 10 mA or 100 mA fixed range, PRESET, and NPLC 100

Calculate DCV Measurement Uncertainty

For Agilent 3458A 1 Year specifications, **Measurement Uncertainty (DC Voltage) = Accuracy (1 year) + Temperature Coefficient + Additional reading error for Absolute Accuracy**.

Accuracy = ± [8.0 ppm of Reading + 0.2 ppm of Range]
Temp Coeff = ± [0.15 ppm of Reading + 0.01 ppm of Range]
Absolute Accuracy Factor = ± [2.0 ppm of Reading]
Meas Uncert (V) = ± [10.15 ppm of Reading + 0.21 ppm of Range]
Reading and Range in Volts DC

Example: Calculate DCV Measurement Uncertainty

For a 5.0 V dc reading on the 10V range for the conditions specified in this manual:

Measurement Uncertainty (V) = ± (10.15 x 10^{-6} x Reading + 0.21 x 10^{-6} x Range) = ± [10^{-6} x (10.15 x 5.0 + 0.21 x 10.0)] = ± 52.85 x 10^{-6} V = ± 52.85 µV.

Calculate DCI Measurement Uncertainty

For Agilent 3458A 1 Year specifications, **Measurement Uncertainty (DC Current) = Accuracy (1 year) + Temperature Coefficient + Additional reading error for Absolute Accuracy.**

For the 10 mA range:

Accuracy (10 mA range) = ± [20.0 ppm of Reading + 5.0 ppm of Range]
Temp Coeff = ± [2.0 ppm of Reading + 1.0 ppm of Range]

Absolute Accuracy Factor = ± [5.0 ppm of Reading]
Meas Uncertainty (A) = ± [27.0 ppm of Reading + 6.0 pp of Range]
Reading and Range in Amps DC

For the 100 mA range:

Accuracy (100 mA range) = ± [35.0 ppm of Reading + 5.0 ppm Range]
Temp Coeff = ± [2.0 ppm of Reading + 1.0 ppm of Range]

Absolute Accuracy Factor = ± [5.0 ppm of Reading]
Meas Uncertainty (A) = ± [42.0 ppm of Reading + 6.0 ppm of Range]
Reading and Range in Amps DC

Example: Calculate DCI Measurement Uncertainty

For a 4.0 mA dc reading on the 10 mA range for the conditions specified in this manual:

Measurement Uncertainty (Amps) = ± [10^{-6} x (27.0 x Reading + 6.0 x Range)] = ± [10^{-6} x (27.0 x .004 + 6.0 x .010)] = ± 0.168 x 10^{-6} A = ± 0.168 μA.

For a 16.0 mA dc reading on the 100 mA range for the conditions specified in this manual:

Measurement Uncertainty (Amps) = ± [10^{-6} x (42.0 x Reading + 6.0 x Range)] = ± [10^{-6} x (42.0 x .016 + 6.0 x .100)] = ± 1.272 x 10^{-6} A= ± 1.272 μA.

Test Accuracy Ratio (T A R) Calculations

For the Agilent E1328A D/A Converter:

$$\textbf{Test Accuracy Ratio (TAR)} = \left| \frac{\text{High Limit} - \text{Output}}{\text{Measurement Uncertainty}} \right|$$

Example: Calculate Voltage Output Test Accuracy Ratio

For an 8.0 V dc output, if the High Limit value = 8.14134 V and Measurement Uncertainty = ± 83.3 µV, **Test Accuracy Ratio (TAR)** = (8.14134 V - 8.00000 V)/83.3 x 10^{-6} V = 1696.76. Since this value is > 10:1, the entry in Table 4-2 is "> 10:1".

Chapter B
Verification Tests - C Programs

Functional Verification Test

These programs are designed to do the Functional Verification Tests found in *Chapter 4 - Verification Tests*.

Example: Self Test

This example performs a DAC self test (*TST? command) to ensure that the DAC is communicating with the mainframe, external controller, and/or external terminal.

```
#include <stdio.h>
#include <sicl.h>

#define ADDR "hpib7,9,9"                    /* Address of Device */

void main ()
{
  INST id;                                  /* Define id as an instrument */
  char a[256] = {0};                        /* Result variable */

  id = iopen (ADDR);                        /* Open instrument session */

  itimeout (id, 10000);                     /* Set 10 sec timeout */

  ipromptf (id, "*TST?\n", "%t", a);        /* Self test command */

  printf ("\n %s", a);                      /* Print result */

  getchar ();                               /* Pause */

  iclose (id);                              /* Close instrument session */
}
```

Example: Positive Voltage Compliance

This program checks the MEASURED voltage output from the DAC channel being tested. If the measured channel output is ≥ 15.0V when the output stops increasing, the program generates a "Test PASSED" indication. If the measured channel output is < 15.0V when the output stops increasing, the program generates a "Test FAILED" indication.

```
/*  Positive Voltage Compliance Test       E1328A */

#include <stdio.h>
#include <sicl.h>

#define ADDR "hpib7,9,9"              /* Address of device */

void main ()
{
  INST id;                            /* Define id as an instrument */
  float source = 0, value = 0, old_value = 0, result = 0;
  int chan;
  char *pass;

  #if defined(__BORLANDC__) && !defined(__WIN32__)
  _InitEasyWin();
  #endif

  ionerror(I_ERROR_EXIT);             /* Exit on error */

  id = iopen (ADDR);                  /* Open instrument session */
  itimeout (id, 10000);               /* Set 10 sec timeout */

  for(chan = 1; chan <= 4; chan++)
  {
    iprintf (id, "CAL%u:STAT OFF\n", chan);
    iprintf (id, "VOLT%u MAX\n", chan);
    source = 4.5;
    value = 0;
    printf ("\nVoltage Compliance Tests on Channel %u", chan);

    do
    {
      source = source + 0.5;
      old_value = value;
      printf("\n Set source to %.1f Volts DC", source);
      printf("\n Measure channel output (in V)");
      printf("\n Enter channel output (in V): ");
      scanf ("%f", &value);
      printf("\n DC Source value = %.1f VDC", source);
      printf("\n Channel %u output = %.1f VDC", chan, value);
      result = value - old_value;
    }
    while (result != 0);
```

```
    if (value >= 15)
      pass = "PASSED";
    else
      pass = "FAILED";
    printf("\n\nMaximum channel %u output = %.1f volts", chan, value);
    printf("\nTest %s for channel %u\n", pass, chan);
    }

  iclose (id);                                  /* Close instrument session */
}
```

Example: Positive Current Compliance

This program checks the MEASURED current output from the DAC channel being tested. If the DC SOURCE voltage is ≥ 13.0V when the output current drops to 90% of maximum current, the program generates a "Test PASSED" indication. If the DC SOURCE voltage is < 13.0V when the output current drops to 90% of maximum current, the program generates a "Test FAILED" indication.

```
/*  Positive Current Compliance Test       E1328A */

#include <stdio.h>
#include <math.h>
#include <sicl.h>

#define ADDR "hpib7,9,9"                        /* Address of device */

void main ()
{
  INST id;                                      /* Define id as an instrument */
  float source = 0, value = 0, result = 0;
  int chan;
  char *pass;

  #if defined(__BORLANDC__) && !defined(__WIN32__)
  _InitEasyWin();
  #endif

  ionerror(I_ERROR_EXIT);                       /* Exit on error */

  id = iopen (ADDR);                            /* Open instrument session */

  for(chan = 1; chan <= 4; chan++)
  {
    iprintf (id, "CAL%u:STAT OFF\n", chan);
    iprintf (id, "CURR%u MAX\n", chan);
```

```
    source = 11.5;
    value = 0;
    printf ("\nCurrent Compliance Tests on Channel %u", chan);

    do
    {
      source = source + 0.5;
      printf("\n Set source to %.1f Volts DC", source);
      printf("\n Measure channel output (in mA)");
      printf("\n Enter channel output (in mA): ");
      scanf ("%f", &value);
      result = abs(100 * value / 24.0);
      printf("\n DC Source value = %.1f VDC", source);
      printf("\n Channel %u output = %.1f mA", chan, value);
      printf("\n Output = %.2f %% of max value", result);
    }
    while (result > 90.0);

    if (source >= 13.0)
      pass = "PASSED";
    else
      pass = "FAILED";

    printf("\n\nDC Source value for 90\% of max = %.1f VDC", source);
    printf("\nTest %s for channel %u\n", pass, chan);
  }

  iclose (id);                                  /* Close instrument session */
}
```

Performance Verification Tests

These programs are designed to do the Performance Verification Tests found in *Chapter 4 - Verification Tests*.

Example: Voltage Accuracy Measurements

This program checks the MEASURED output voltage on each DAC channel and compares the result with the 1-year accuracy specifications for the DAC.

```
/*  Voltage Accuracy Measurements Test       E1328A */

#include <stdio.h>
#include <math.h>
#include <sicl.h>

#define ADDR "hpib7,9,9"                    /* Address of device */

void main ()
{
  INST id;                                  /* Define id as an instrument */
  float volts[9] = {-10, -8, -5, -2, 0, 2, 5, 8, 10};
  float acc, ulim, llim, meas;
  int chan,i;

  #if defined(__BORLANDC__) && !defined(__WIN32__)
  _InitEasyWin();
  #endif

  ionerror(I_ERROR_EXIT);                   /* Exit on error */

  id = iopen (ADDR);                        /* Open instrument session */

  iprintf (id, "*RST\n");

  for(chan = 1; chan <= 4; chan++)
  {
    printf ("\nVoltage Accuracy Measurements on Channel %u\n", chan);

    for (i = 0; i < 9; i++)
    {
      iprintf (id, "VOLT%u %f\n", chan, volts[i]);
      printf ("\n New voltage output on channel %u = %f V", chan, volts[i]);
      printf ("\n Enter MEASURED voltage value (in V) : ");
      scanf ("%f", &meas);

      acc = 0.0035 * abs(volts[i]) + .11334;
      llim = volts[i] - acc;
      ulim = volts[i] + acc;
```

```
      if ((meas < llim) || (meas > ulim))
        printf ("Test FAILED on channel %u for %.1f V", chan, volts[i]);
      else
        printf ("Test PASSED on channel %u for %.1f V", chan, volts[i]);
    }
  }

  printf ("Voltage Accuarcy Tests Complete");

  iclose (id);                                  /* Close instrument session */
}
```

Example: Current Accuracy Measurements

This program checks the MEASURED output current on each DAC channel and compares the result with the 1-year accuracy specifications for the DAC.

```
/*  Current Accuracy Measurements Test       E1328A */

#include <stdio.h>
#include <math.h>
#include <sicl.h>

#define ADDR "hpib7,9,9"                        /* Address of device */

void main ()
{
  INST id;                                  /* Define id as an instrument */
  float amps[9] = {-.02, -.016, -.01, -.004, 0, .004, .01, .016, .02};
  float acc, ulim, llim, meas;
  int chan,i;

  #if defined(__BORLANDC__) && !defined(__WIN32__)
  _InitEasyWin();
  #endif

  ionerror(I_ERROR_EXIT);                   /* Exit on error */

  id = iopen (ADDR);                        /* Open instrument session */

  iprintf (id, "*RST\n");

  for(chan = 1; chan <= 4; chan++)
```

```
  {
    printf ("\nCurrent Accuracy Measurements on Channel %u\n", chan);

    for (i = 0; i < 9; i++)
    {
      iprintf (id, "CURR%u %f\n", chan, amps[i]);
      printf ("\n New current output on channel %u = %f A", chan, amps[i]);
      printf ("\n Enter MEASURED current value (in mA) : ");
      scanf ("%f", &meas);

      acc = 0.0035 * abs(amps[i]) + .00022665;
      llim = amps[i] - acc;
      ulim = amps[i] + acc;
      if ((meas*.001 < llim) || (meas*.001 > ulim))
        printf ("Test FAILED on channel %u for %f A", chan, amps[i]);
      else
        printf ("Test PASSED on channel %u for %f A", chan, amps[i]);
    }
  }

  printf ("Current Accuarcy Tests Complete");

  iclose (id);                                  /* Close instrument session */
}
```

Adjustments

These programs are designed to assist with the adjustment procedures found in *Chapter 5 - Adjustments*.

Example: Voltage Adjustments

This program uses the measured minimum, default, and maximum values you enter to update the voltage adjustment constants for Channels 1, 2, 3, and 4.

```
/*  Voltage Adjustments       E1328A */

#include <stdio.h>
#include <sicl.h>

#define ADDR "hpib7,9,9"                    /* Address of device */

void main ()
{
  INST id;                                  /* Define id as an instrument */
  float min, def, max;
  int chan;

  #if defined(__BORLANDC__) && !defined(__WIN32__)
  _InitEasyWin();
  #endif

  ionerror(I_ERROR_EXIT);                   /* Exit on error */

  id = iopen (ADDR);                        /* Open instrument session */

  for(chan = 1; chan <= 4; chan++)
  {
    printf ("\nVoltage Adjustments on Channel %u", chan);
    iprintf (id, "CAL%u:STAT OFF\n", chan);

    iprintf (id, "VOLT%u MIN\n", chan);
    printf ("\n\nChannel %u is set to minimum (-12V)", chan);
    printf ("\nEnter measured value (in V to 5.5 digits) : ");
    scanf ("%f", &min);

    iprintf (id, "VOLT%u DEF\n", chan);
    printf ("\nChannel %u is set to default (0V)", chan);
    printf ("\nEnter measured value (in V to 5.5 digits) : ");
    scanf ("%f", &def);

    iprintf (id, "VOLT%u MAX\n", chan);
    printf ("\nChannel %u is set to maximum (+12V)", chan);
    printf ("\nEnter measured value (in V to 5.5 digits) : ");
    scanf ("%f", &max);

    iprintf (id, "CAL%u:VOLT %f,%f,%f\n",chan,min,def,max);
```

```
  }

  printf ("\n\nVoltage Adjustments Complete");

  iclose (id);                                  /* Close instrument session */
}
```

Example: Current Adjustments

This program uses the measured minimum, default, and maximum values you enter to update the current adjustment constants for Channels 1, 2, 3, and 4.

```
/*  Current Adjustments       E1328A */

#include <stdio.h>
#include <sicl.h>

#define ADDR "hpib7,9,9"                        /* Address of device */

void main ()
{
  INST id;                                      /* Define id as an instrument */
  float min, def, max;
  int chan;

  #if defined(__BORLANDC__) && !defined(__WIN32__)
  _InitEasyWin();
  #endif

  ionerror(I_ERROR_EXIT);                       /* Exit on error */

  id = iopen (ADDR);                            /* Open instrument session */

  for(chan = 1; chan <= 4; chan++)
  {
    printf ("\nCurrent Adjustments on Channel %u", chan);
    iprintf (id, "CAL%u:STAT OFF\n", chan);

    iprintf (id, "CURR%u MIN\n", chan);
    printf ("\n\nChannel %u is set to minimum (-.024 A)", chan);
    printf ("\nEnter measured value (in A to 5.5 digits) : ");
    scanf ("%f", &min);

    iprintf (id, "CURR%u DEF\n", chan);
    printf ("\nChannel %u is set to default (0 A)", chan);
    printf ("\nEnter measured value (in A to 5.5 digits) : ");
    scanf ("%f", &def);
```

```
    iprintf (id, "CURR%u MAX\n", chan);
    printf ("\nChannel %u is set to maximum (+.024 A)", chan);
    printf ("\nEnter measured value (in A to 5.5 digits) : ");
    scanf ("%f", &max);

    iprintf (id, "CAL%u:CURR %f,%f,%f\n",chan,min,def,max);
  }

  printf ("\n\nCurrent Adjustments Complete");

  iclose (id);                                  /* Close instrument session */
}
```